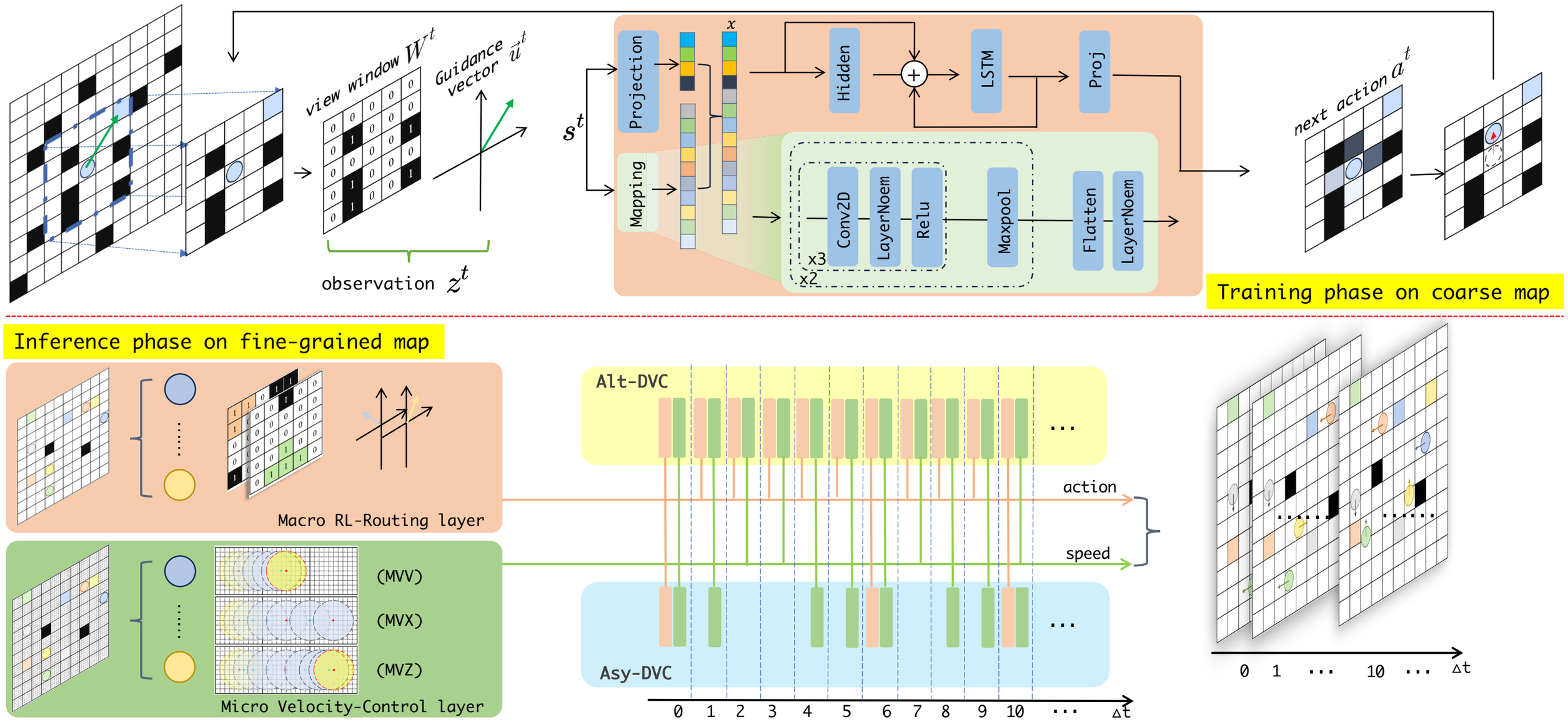
view window W^t
Guidance vector $\vec{u}^t$
observation z^t
s^t
Projection
Mapping
x
Hidden
LSTM
Proj
Conv2D
LayerNoem
Relu
Maxpool
Flatten
LayerNoem
x3
x2
next action a^t
Training phase on coarse map
Inference phase on fine-grained map
Macro RL-Routing layer
(MVV)
(MVX)
(MVZ)
Micro Velocity-Control layer
Alt-DVC
Asy-DVC
action
speed
0 1 2 3 4 5 6 7 8 9 10 ... Δt
0 1 ... 10 ... Δt