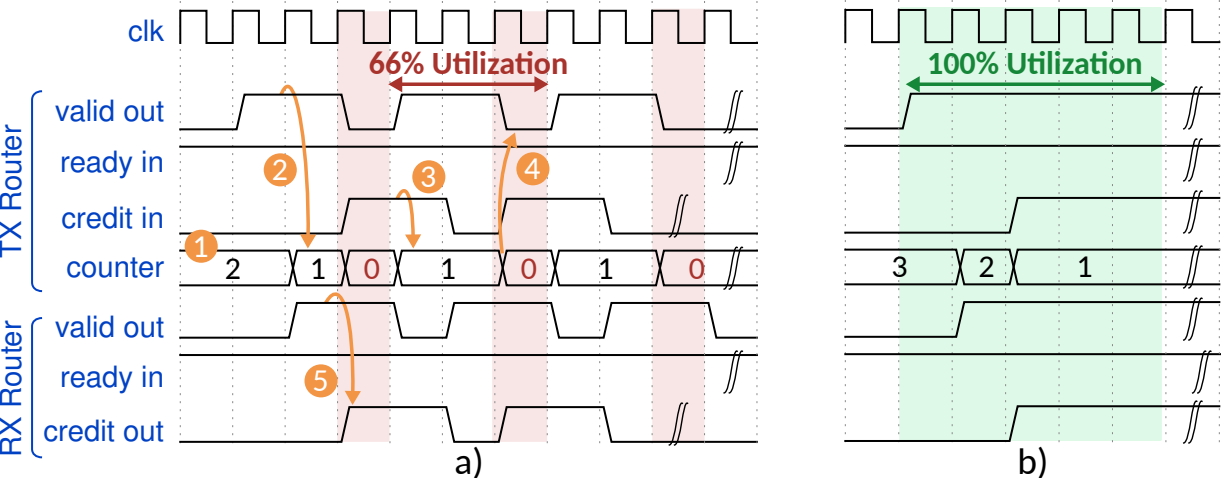
clk
66% Utilization
100% Utilization
TX Router
valid out
ready in
credit in
counter
RX Router
valid out
ready in
credit out
1
2
3
4
5
2
1
0
1
0
1
0
3
2
1
a)
b)