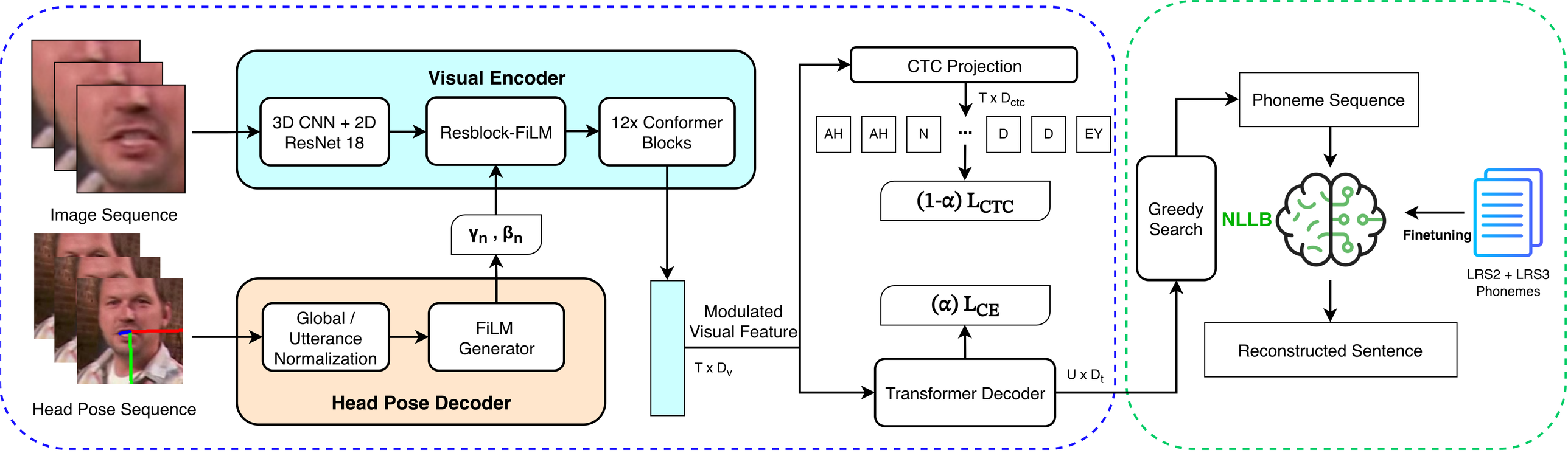
Image Sequence
Head Pose Sequence
Visual Encoder
3D CNN + 2D ResNet 18
Resblock-FiLM
12x Conformer Blocks
γ_n , β_n
Global / Utterance Normalization
FiLM Generator
Head Pose Decoder
Modulated Visual Feature
T x D_v
CTC Projection
T x D_{ctc}
AH
AH
N
...
D
D
EY
(1-α) L_{CTC}
(α) L_{CE}
Transformer Decoder
U x D_t
Greedy Search
Phoneme Sequence
NLLB
Finetuning
LRS2 + LRS3 Phonemes
Reconstructed Sentence
Stage 1: Visual and Head-Pose Modulation
Stage 2: Language Model Reconstruction