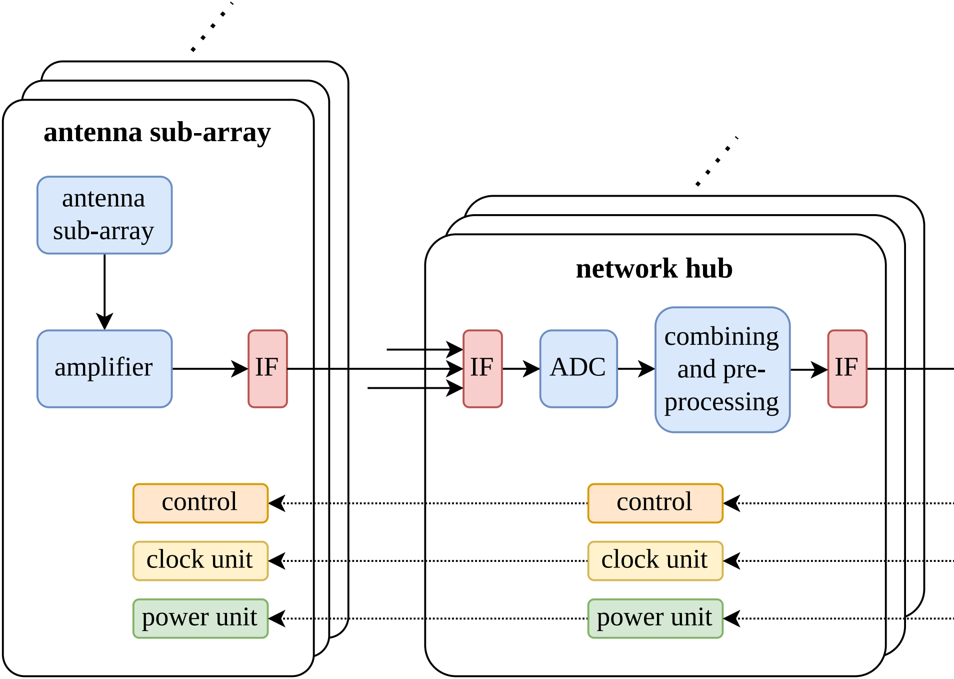
antenna sub-array
antenna sub-array
amplifier
IF
control
clock unit
power unit
network hub
IF
ADC
combining and pre-processing
IF
control
clock unit
power unit

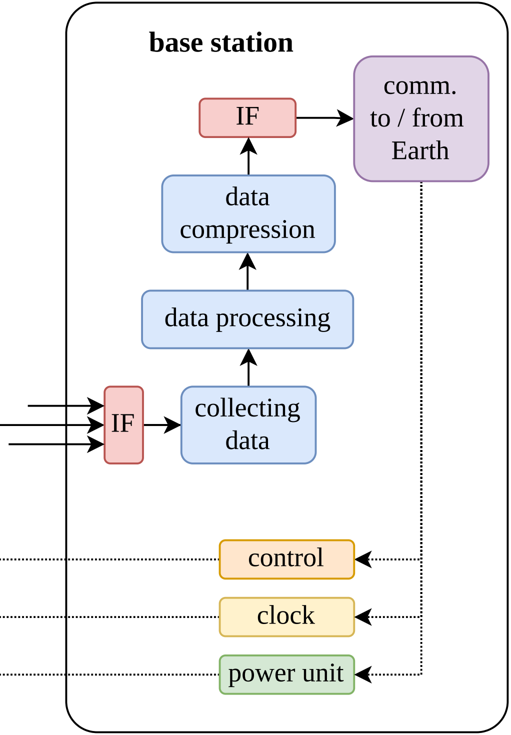
base station
IF
comm. to / from Earth
data compression
data processing
IF
collecting data
control
clock
power unit