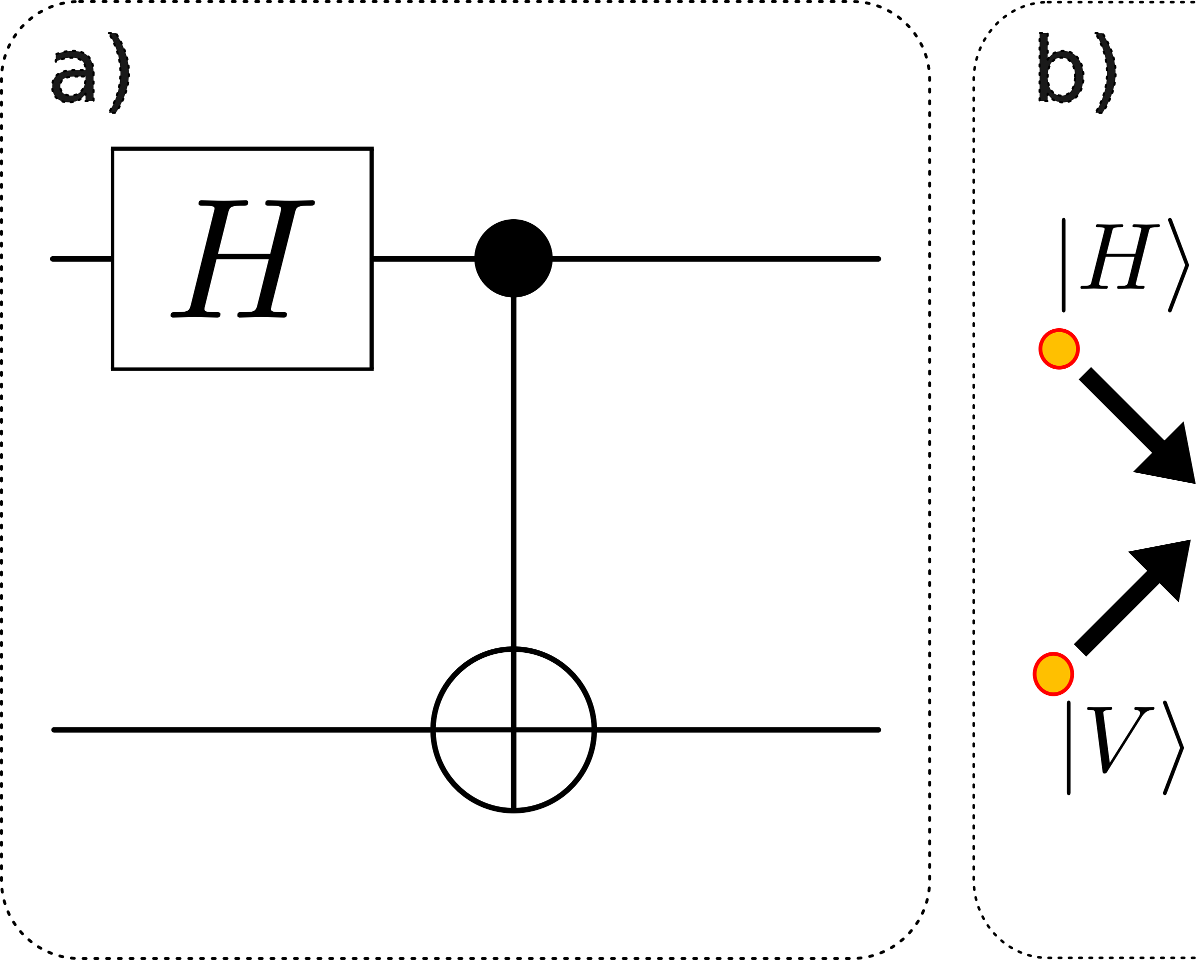
a)
H
b)
$|H\rangle$
$|V\rangle$

Input preparation

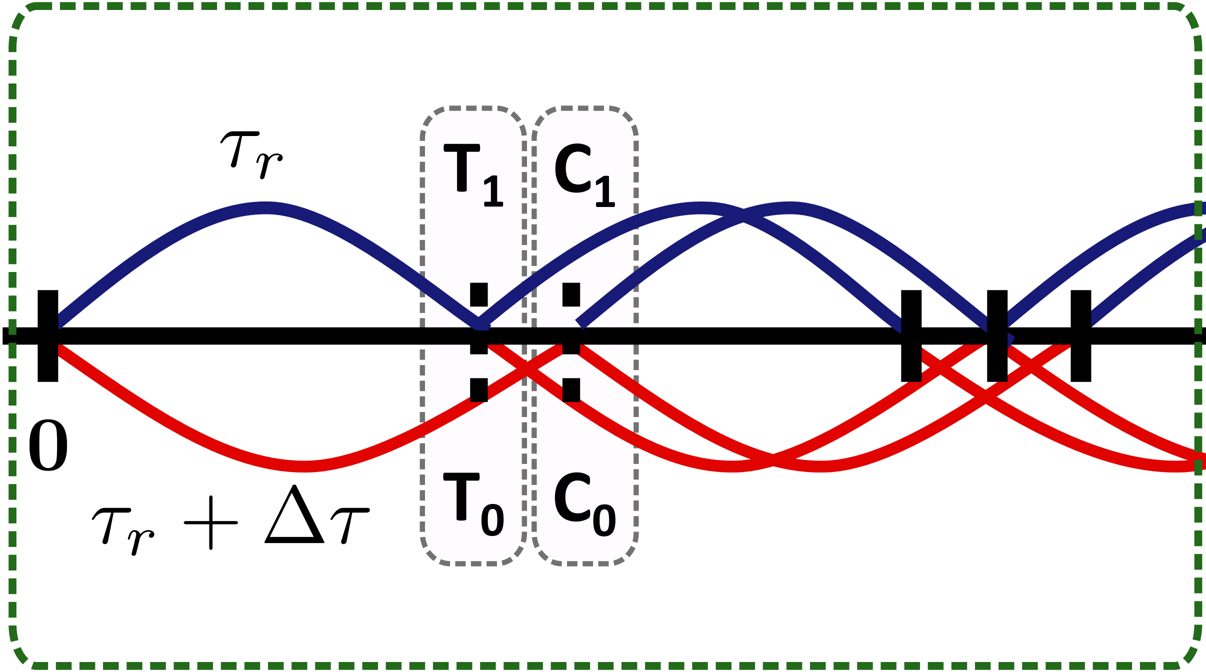
τ_r
T_1
C_1
0
$\tau_r + \Delta\tau$
T_0
C_0

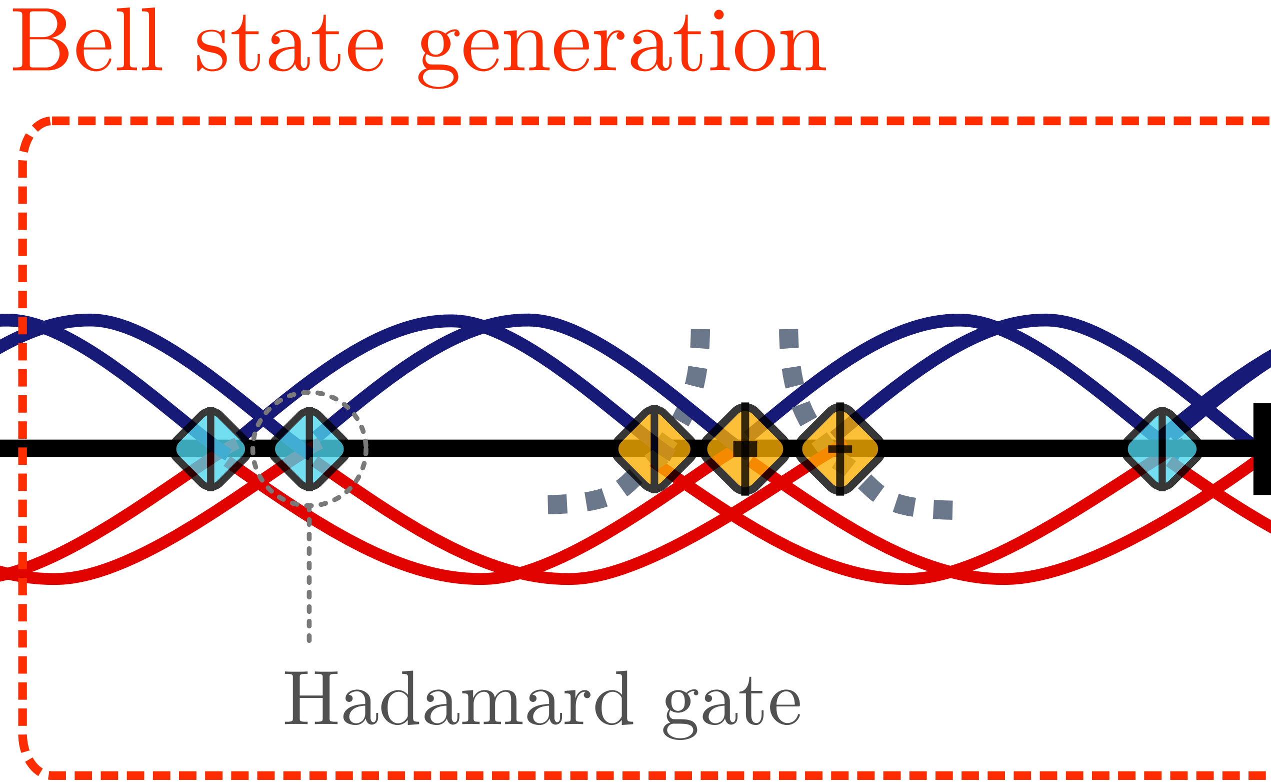
Bell state generation
Hadamard gate

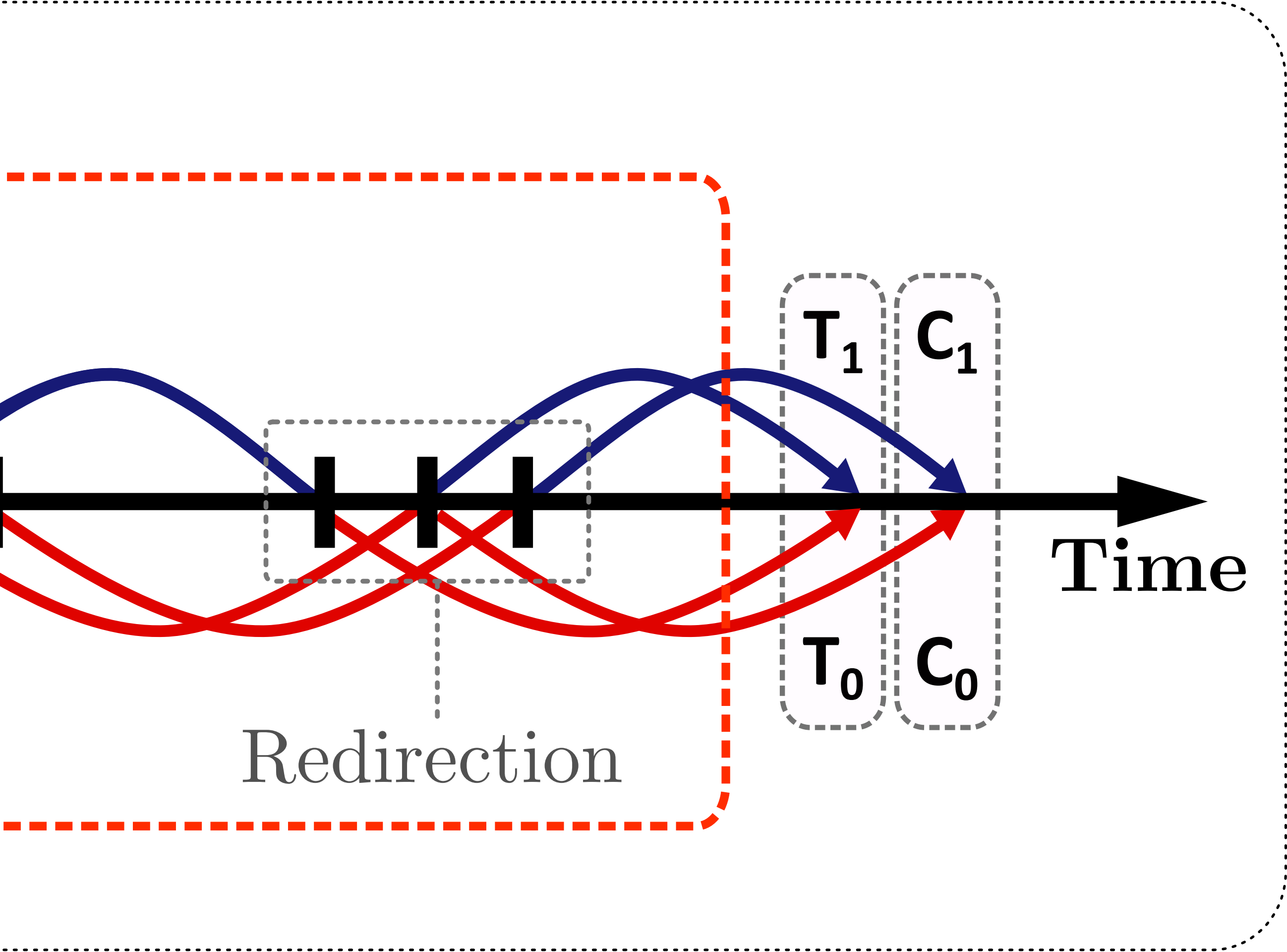
T_1
C_1
T_0
C_0
Time
Redirection