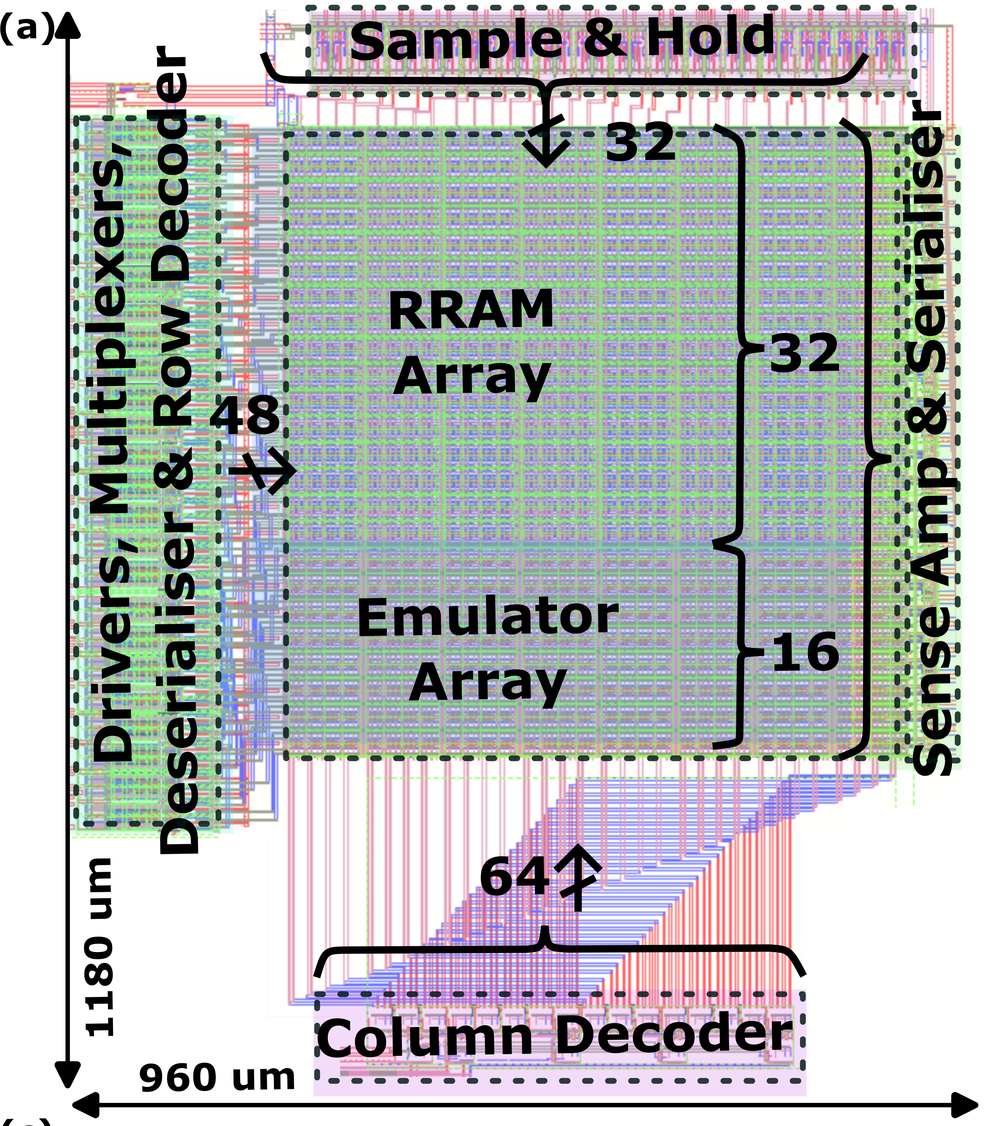
(a)
Sample & Hold
32
Drivers, Multiplexers, Deserialiser & Row Decoder
48
RRAM Array
32
Emulator Array
16
Sense Amp & Serialiser
64
Column Decoder
1180 um
960 um

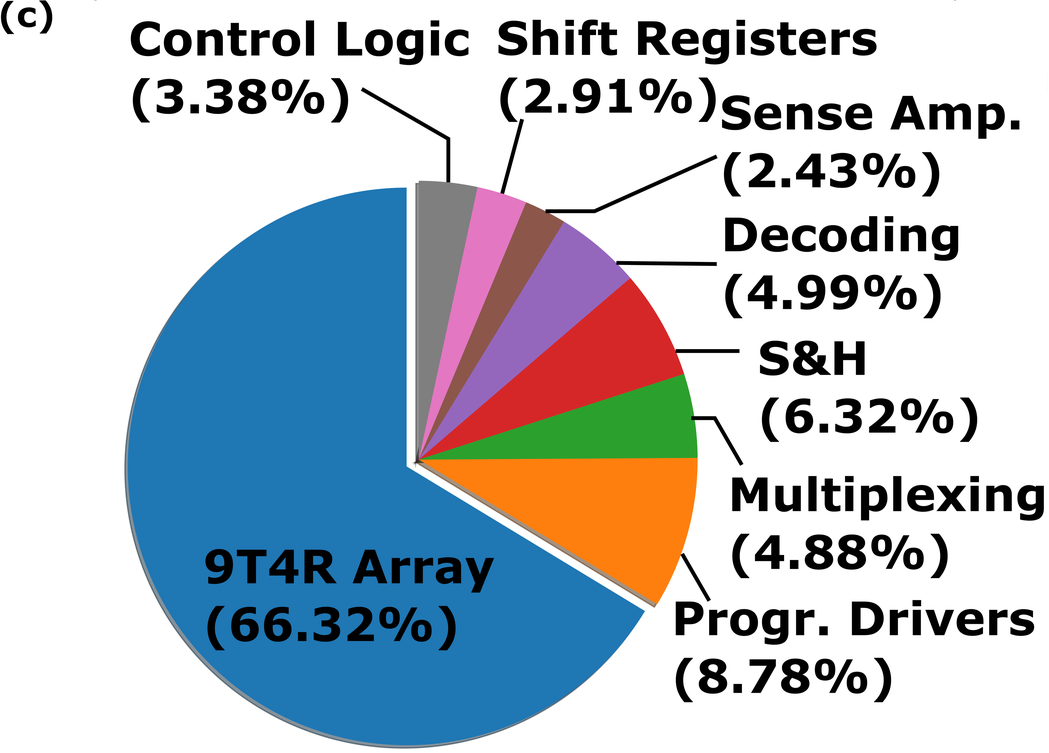
(c)
Control Logic (3.38%)
Shift Registers (2.91%)
Sense Amp. (2.43%)
Decoding (4.99%)
S&H (6.32%)
Multiplexing (4.88%)
Progr. Drivers (8.78%)
9T4R Array (66.32%)

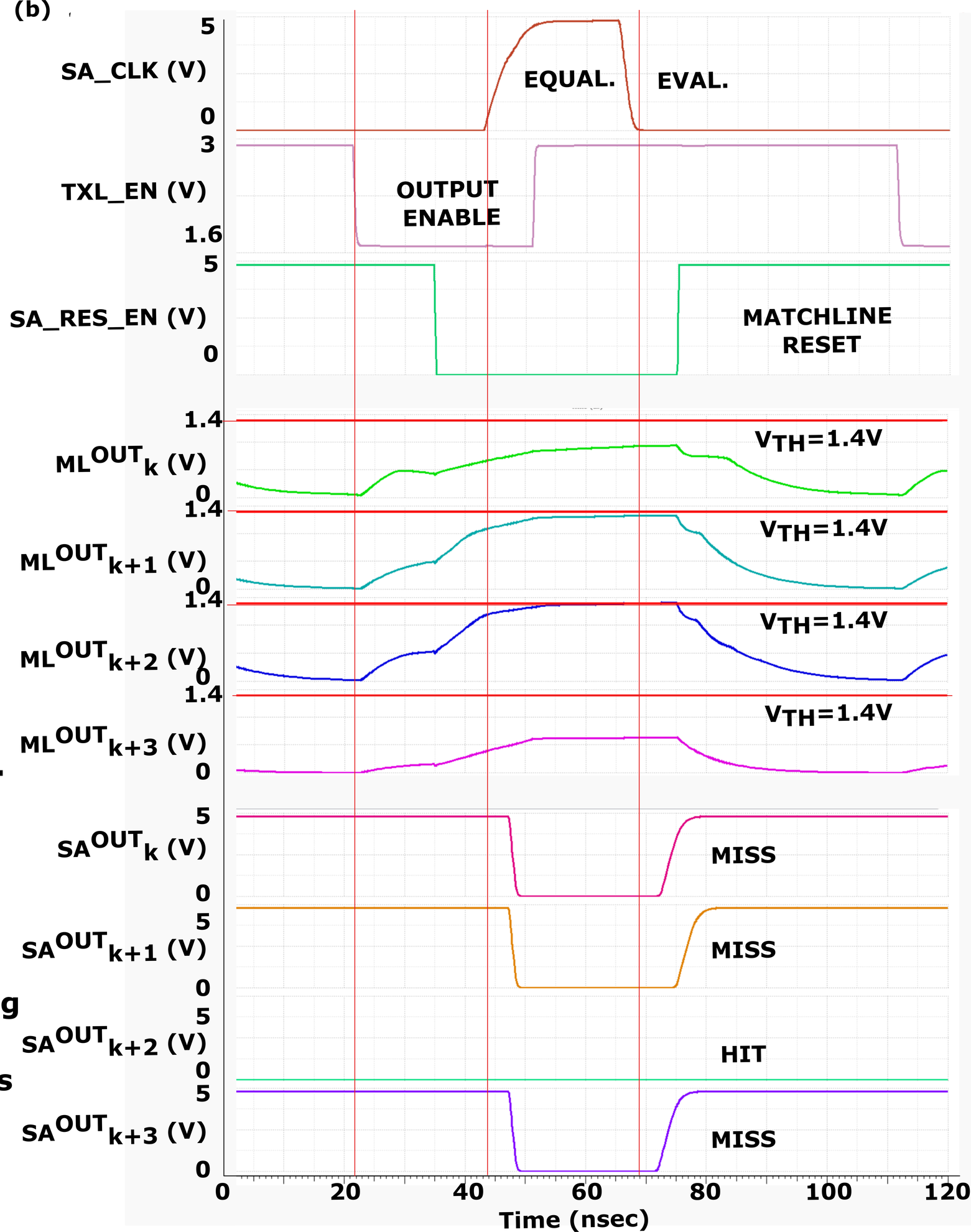
(b)
SA_CLK (V)
EQUAL.
EVAL.
TXL_EN (V)
OUTPUT ENABLE
SA_RES_EN (V)
MATCHLINE RESET
ML^OUT_k (V)
V_TH=1.4V
ML^OUT_k+1 (V)
V_TH=1.4V
ML^OUT_k+2 (V)
V_TH=1.4V
ML^OUT_k+3 (V)
V_TH=1.4V
SA^OUT_k (V)
MISS
SA^OUT_k+1 (V)
MISS
SA^OUT_k+2 (V)
HIT
SA^OUT_k+3 (V)
MISS
Time (nsec)