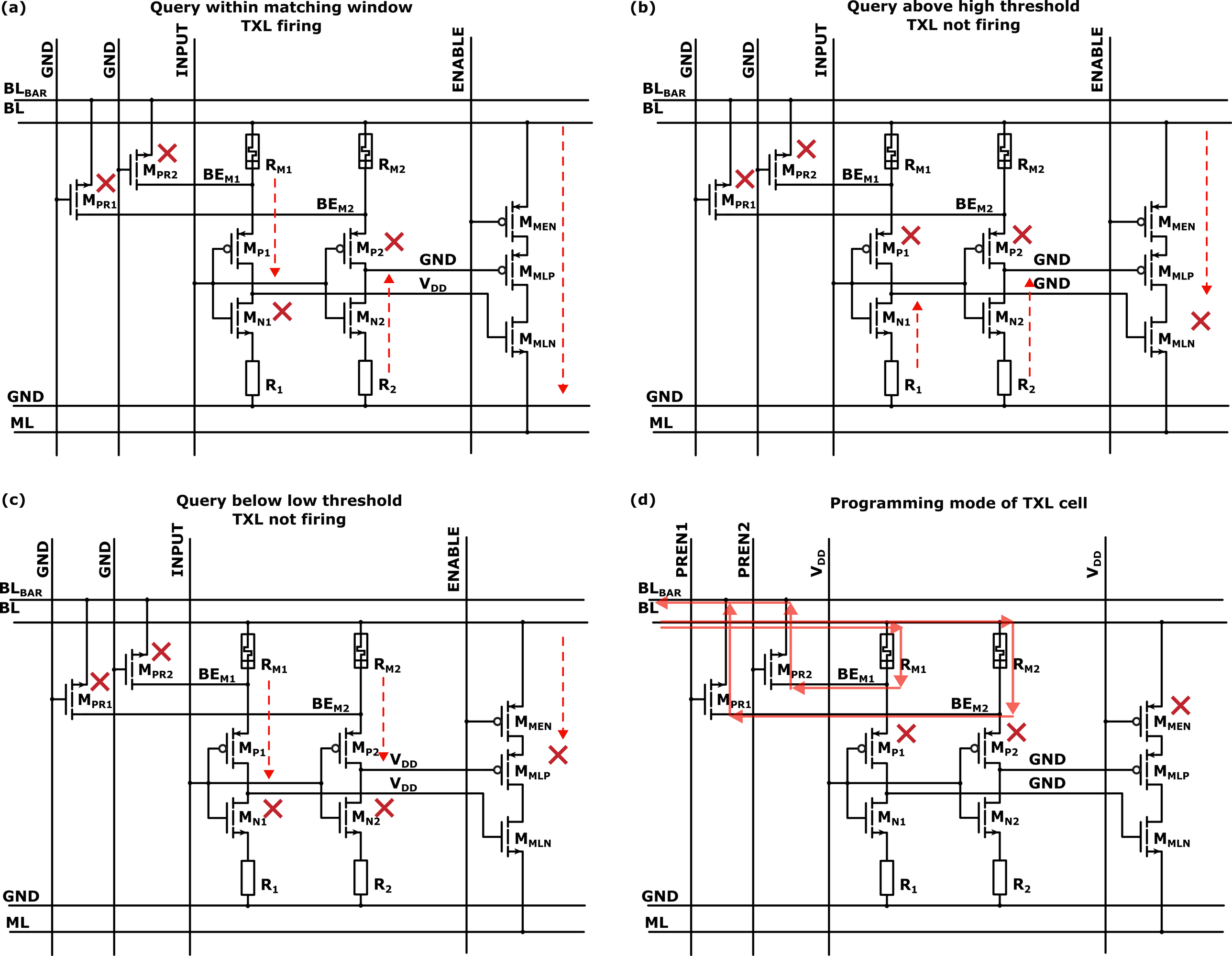
(a)
Query within matching window
TXL firing
(b)
Query above high threshold
TXL not firing
(c)
Query below low threshold
TXL not firing
(d)
Programming mode of TXL cell
GND
INPUT
ENABLE
PREN1
PREN2
BL_BAR
BL
GND
ML
M_PR1
M_PR2
BE_M1
BE_M2
R_M1
R_M2
M_P1
M_P2
M_N1
M_N2
R_1
R_2
M_MEN
M_MLP
M_MLN
V_DD