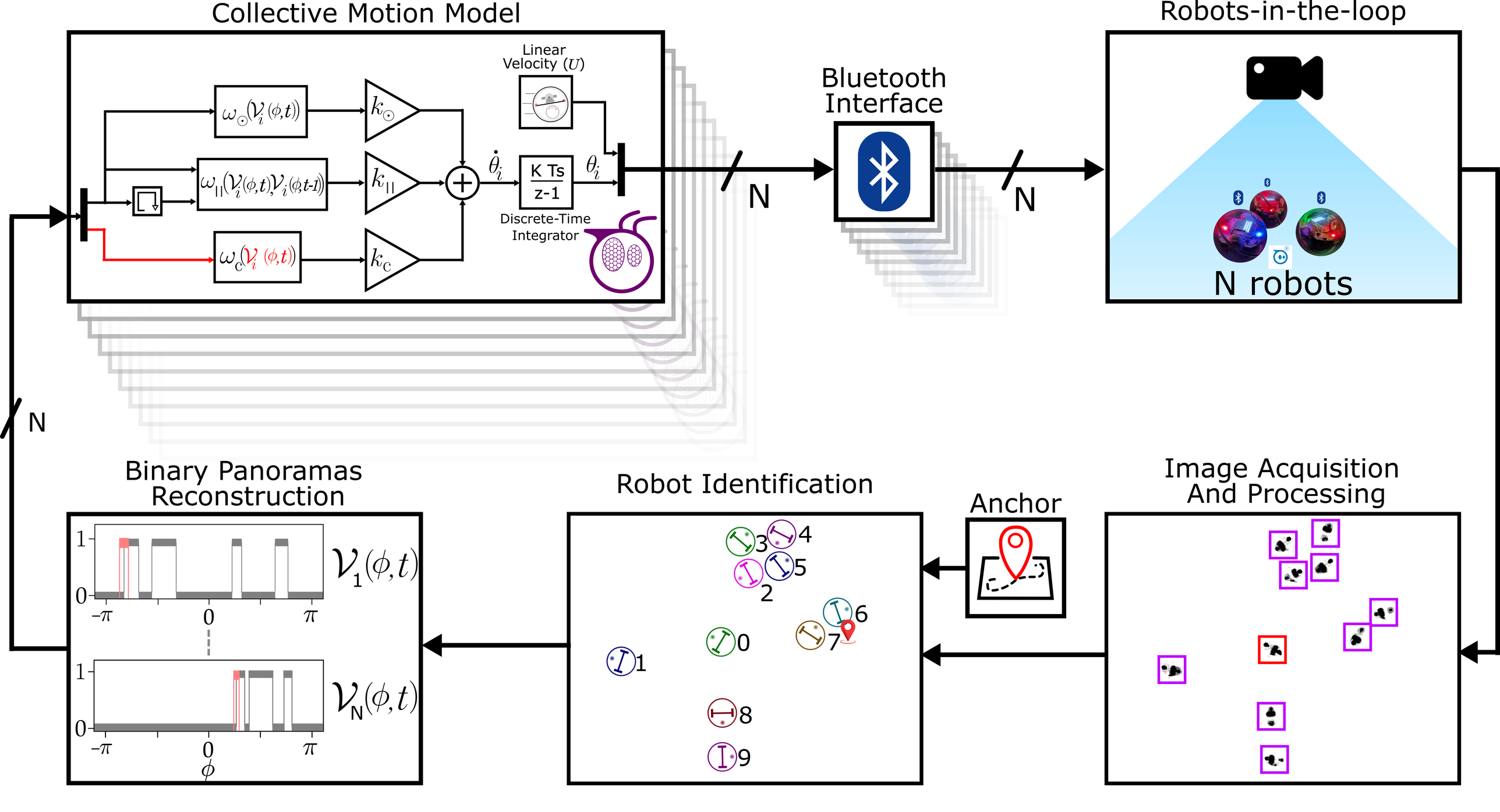
Collective Motion Model
Linear Velocity (U)
$\omega_{\odot}(\mathcal{V}_i(\phi,t))$
$k_{\odot}$
$\omega_{||}(\mathcal{V}_i(\phi,t),\mathcal{V}_i(\phi,t\text{-}1))$
$k_{||}$
$\omega_{c}(\mathcal{V}_i(\phi,t))$
k_{c}
$\dot{\theta}_i$
K Ts
z-1
θ_i
Discrete-Time Integrator
N
Bluetooth Interface
N
Robots-in-the-loop
N robots
N
Binary Panoramas Reconstruction
1
0
$-\pi$
0
π
$\mathcal{V}_1(\phi,t)$
1
0
$-\pi$
0
π
ϕ
$\mathcal{V}_N(\phi,t)$
Robot Identification
3
4
5
2
6
7
0
1
8
9
Anchor
Image Acquisition And Processing