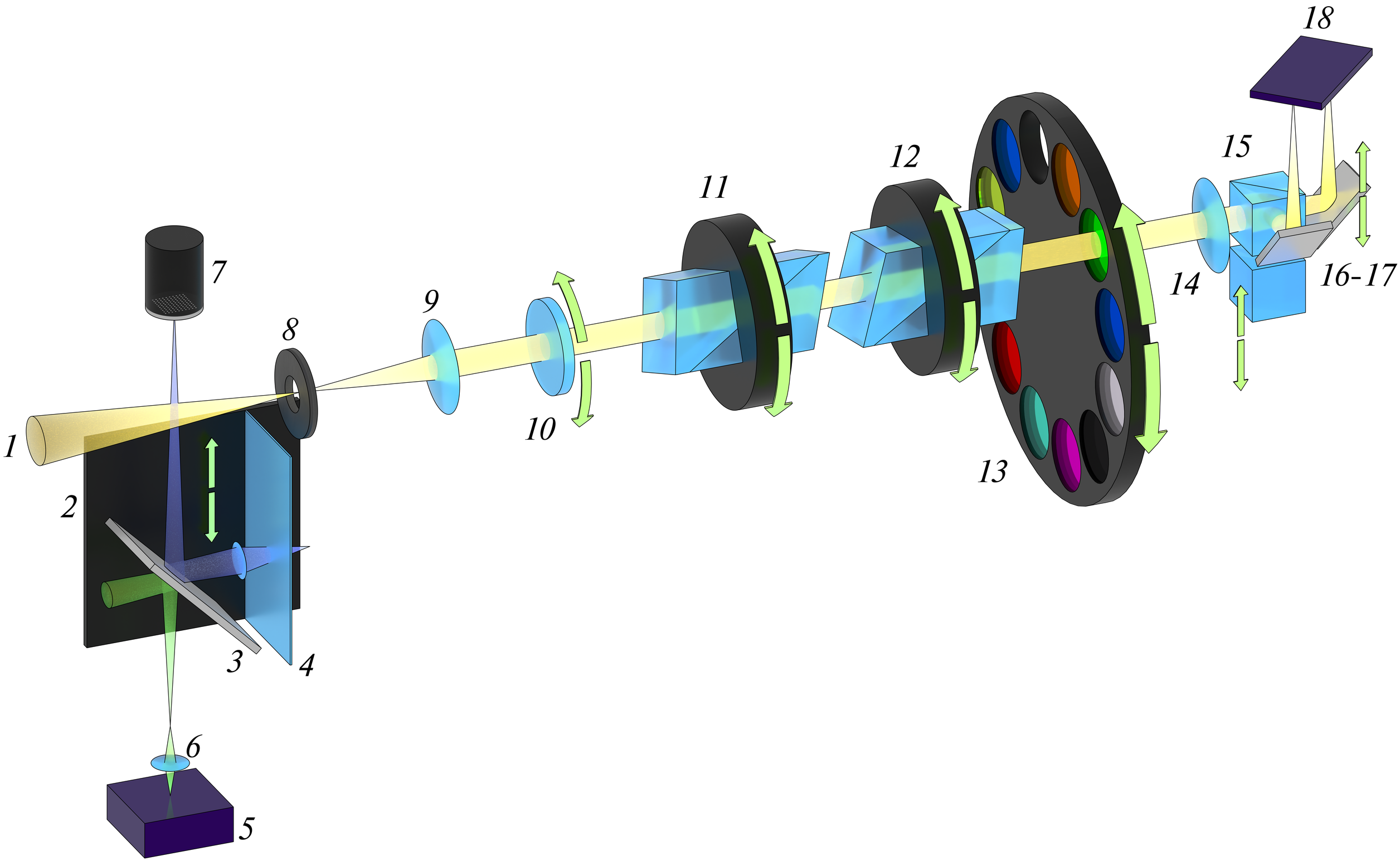
18
15
12
11
7
9
8
14
16-17
10
1
13
2
3
4
6
5