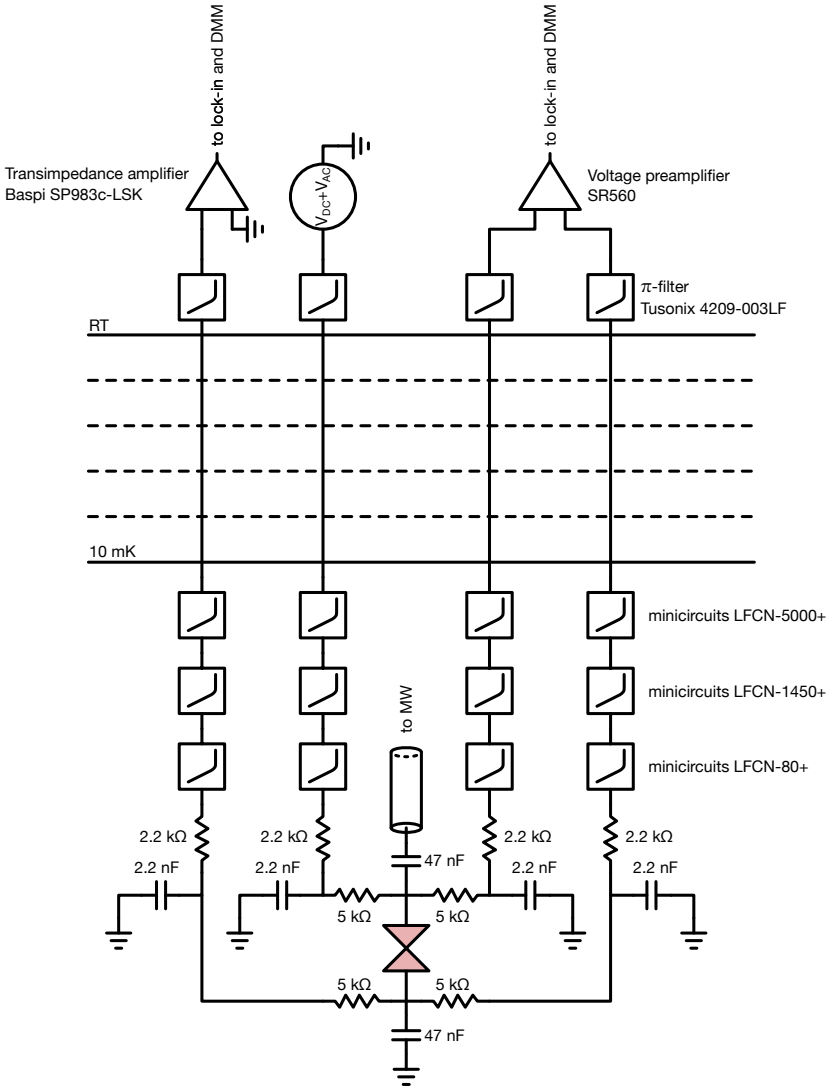
to lock-in and DMM
to lock-in and DMM
Transimpedance amplifier
Baspi SP983c-LSK
$V_{DC}+V_{AC}$
Voltage preamplifier
SR560
π-filter
Tusonix 4209-003LF
RT
10 mK
minicircuits LFCN-5000+
minicircuits LFCN-1450+
minicircuits LFCN-80+
to MW
2.2 kΩ
2.2 nF
2.2 kΩ
2.2 nF
47 nF
2.2 kΩ
2.2 nF
2.2 kΩ
2.2 nF
5 kΩ
5 kΩ
5 kΩ
5 kΩ
47 nF

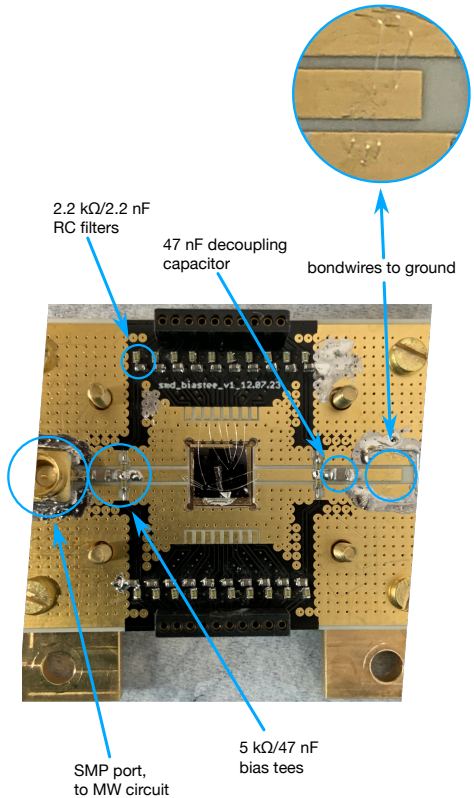
2.2 kΩ/2.2 nF
RC filters
47 nF decoupling
capacitor
bondwires to ground
SMP port,
to MW circuit
5 kΩ/47 nF
bias tees