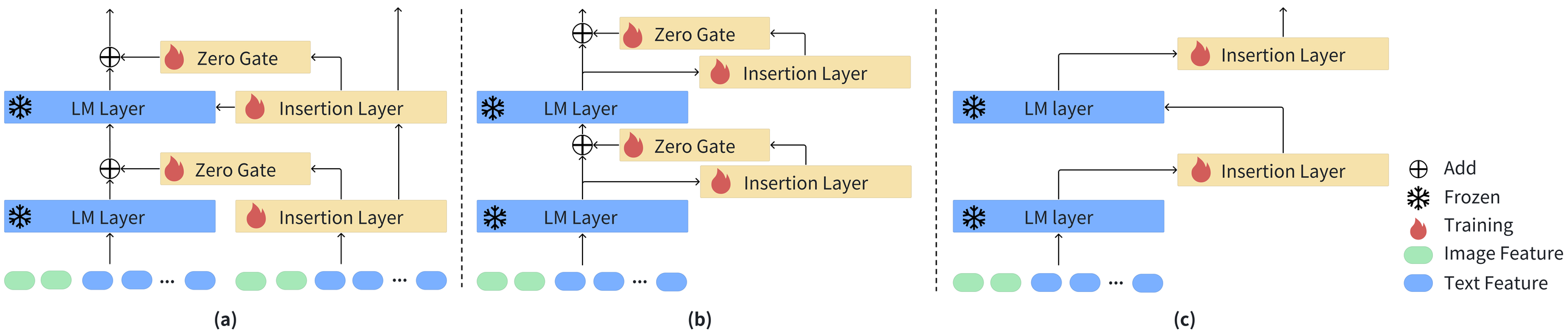
Zero Gate
LM Layer
Insertion Layer
Zero Gate
LM Layer
Insertion Layer
(a)
Zero Gate
Insertion Layer
LM Layer
Zero Gate
Insertion Layer
LM Layer
(b)
Insertion Layer
LM layer
Insertion Layer
LM layer
(c)
Add
Frozen
Training
Image Feature
Text Feature