A. Architecture

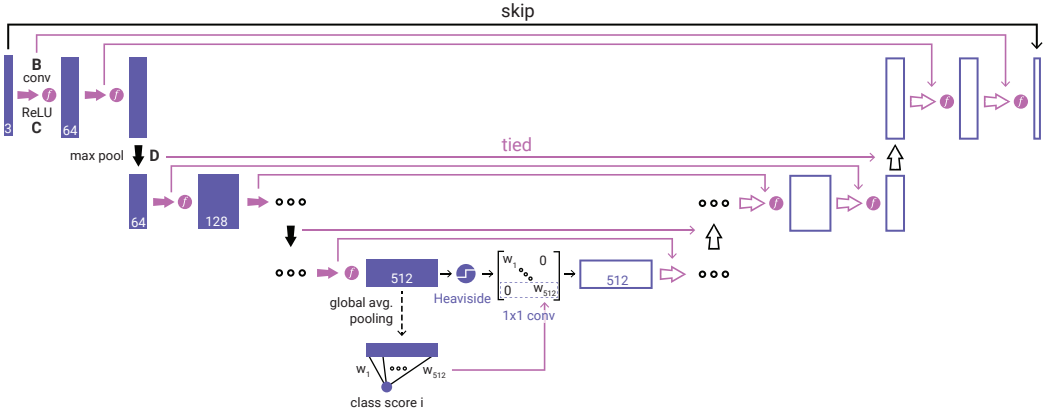

B. Tied convolution

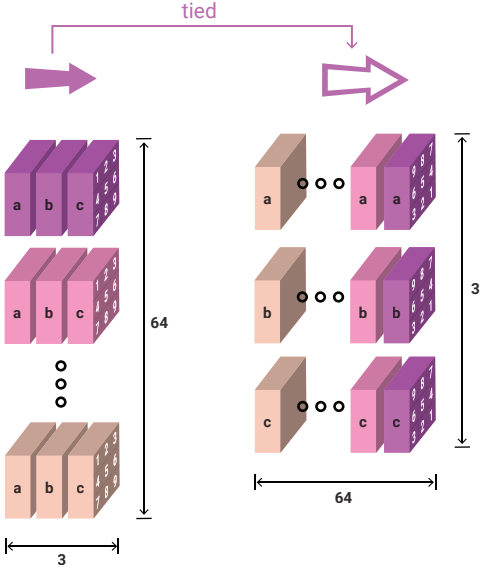

C. Tied activation function

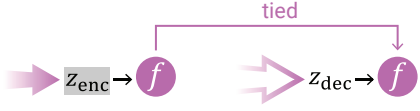

$$f(z, z_{\text{enc}}) = \begin{cases} z, & z_{\text{enc}} \geq 0 \\ 0, & z_{\text{enc}} < 0 \end{cases}$$
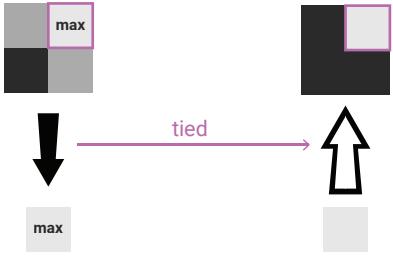
D. Tied down/up-sampling