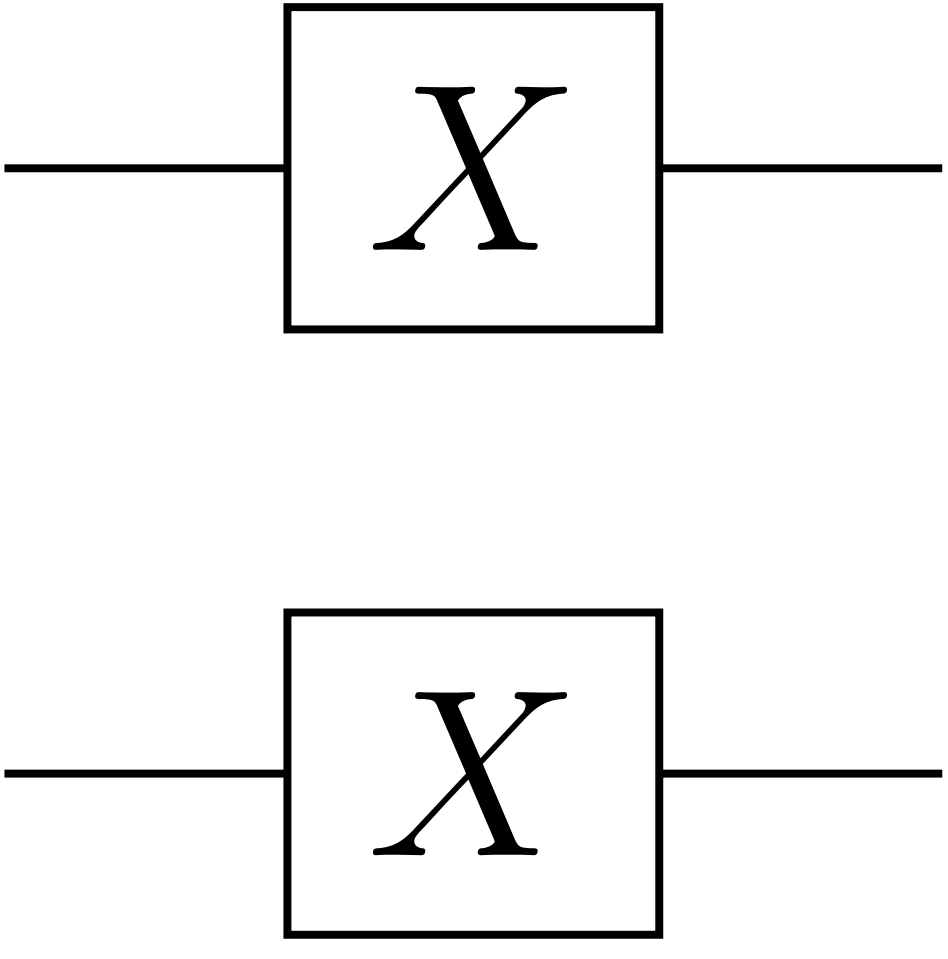$$U^{(0)} \equiv$$