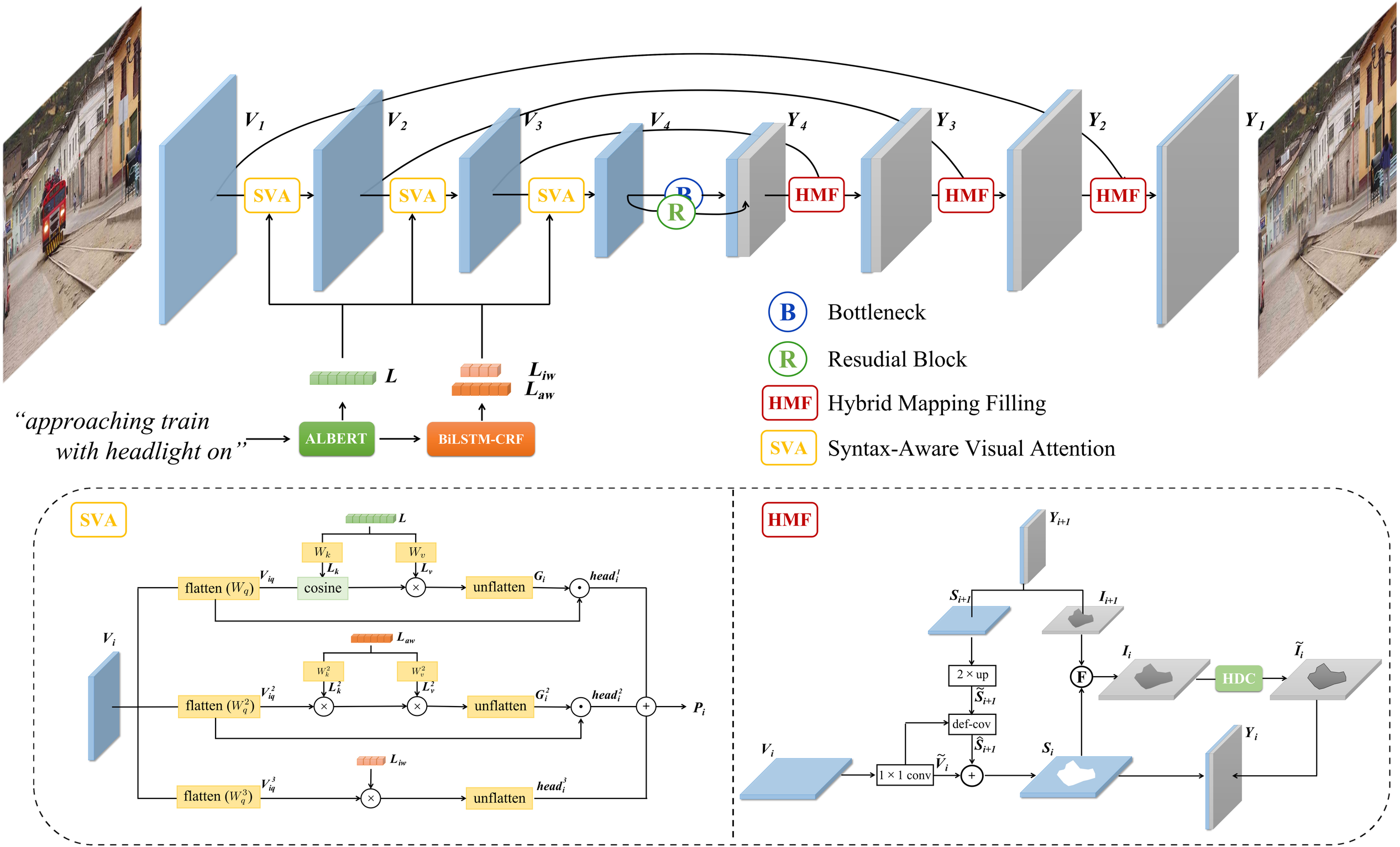
V1
V2
V3
V4
Y4
Y3
Y2
Y1
SVA
SVA
SVA
B
R
HMF
HMF
HMF
L
Liw
Law
"approaching train with headlight on"
ALBERT
BiLSTM-CRF
B Bottleneck
R Resudial Block
HMF Hybrid Mapping Filling
SVA Syntax-Aware Visual Attention
SVA
L
Wk
Wv
Lk
Lv
flatten (Wq)
Viq
cosine
unflatten
Gi
headi1
Vi
Law
Wk2
Wv2
Lk2
Lv2
flatten (Wq2)
Viq2
unflatten
Gi2
headi2
Pi
Liw
flatten (Wq3)
Viq3
unflatten
headi3
HMF
Yi+1
Si+1
Ii+1
2 × up
S̃i+1
def-cov
Ŝi+1
F
Ii
HDC
Ĩi
Vi
1 × 1 conv
Ṽi
Si
Yi