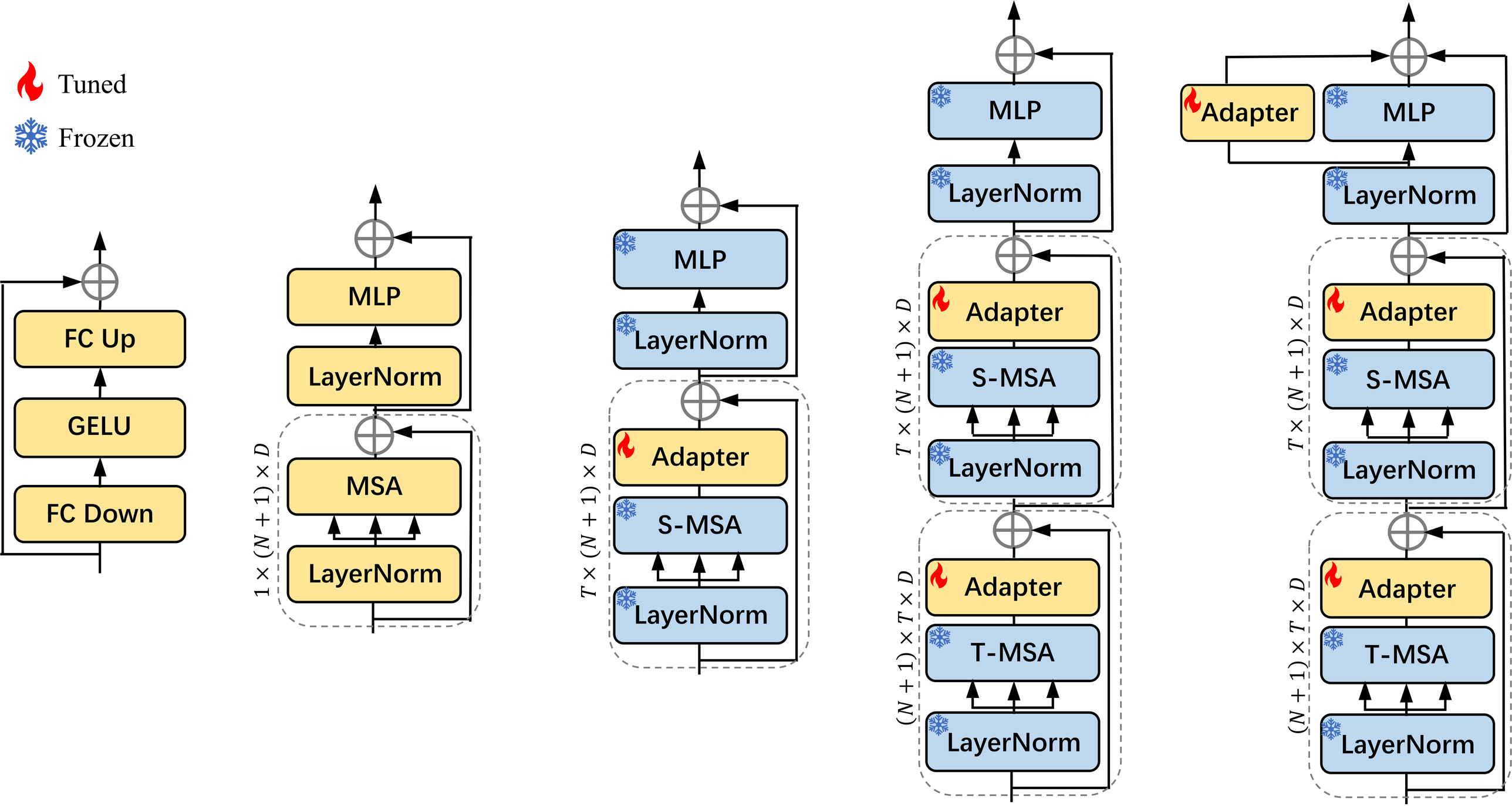

(a) Adapter (b) ViT Block (c) Spatial Adaptation (d) Temporal Adaptation (e) Joint Adaptation