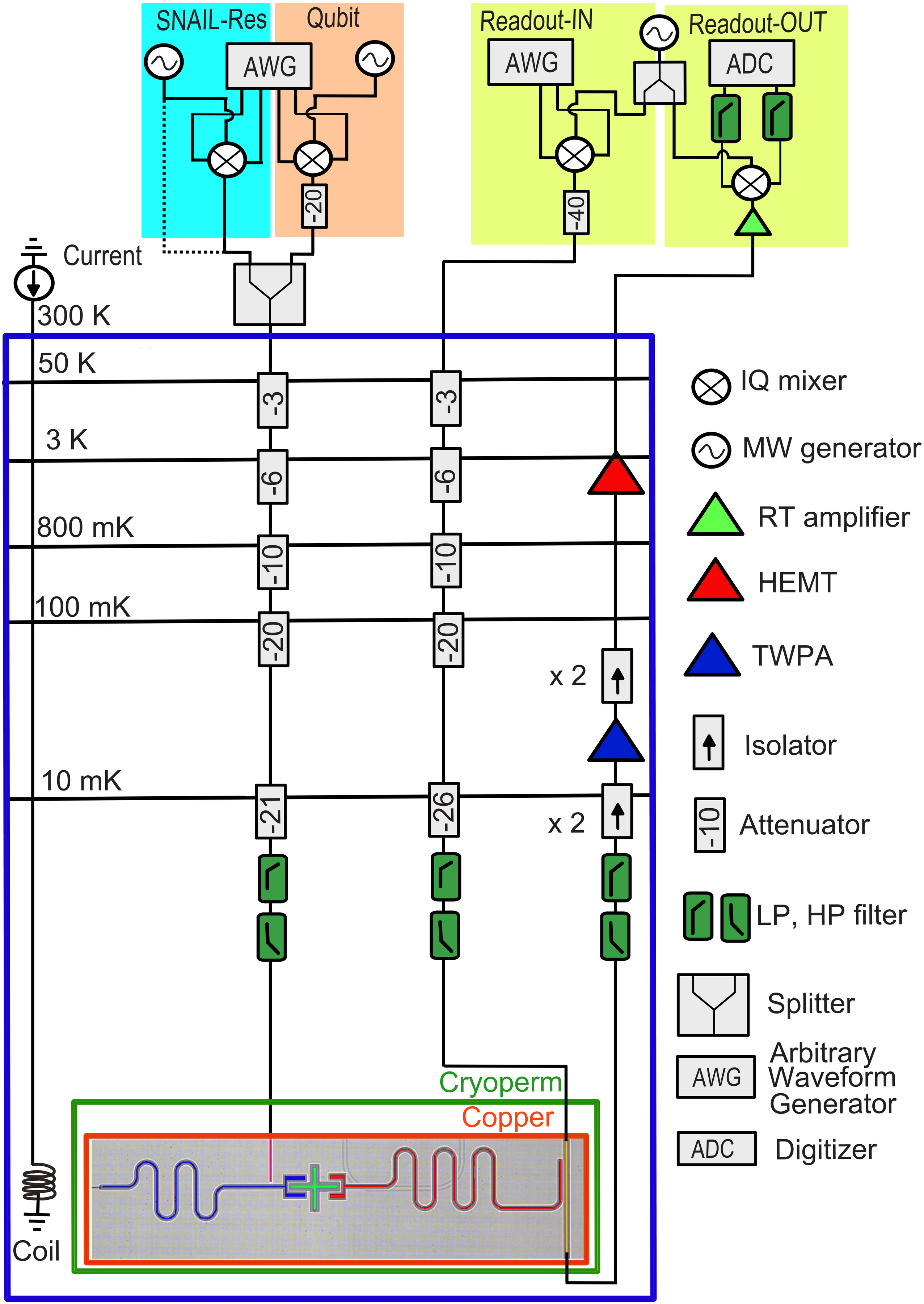
SNAIL-Res
Qubit
Readout-IN
Readout-OUT
AWG
AWG
ADC
-20
-40
Current
300 K
50 K
3 K
800 mK
100 mK
10 mK
-3
-3
-6
-6
-10
-10
-20
-20
-21
-26
x 2
x 2
Cryoperm
Copper
Coil
IQ mixer
MW generator
RT amplifier
HEMT
TWPA
Isolator
Attenuator
LP, HP filter
Splitter
AWG
Arbitrary Waveform Generator
ADC
Digitizer