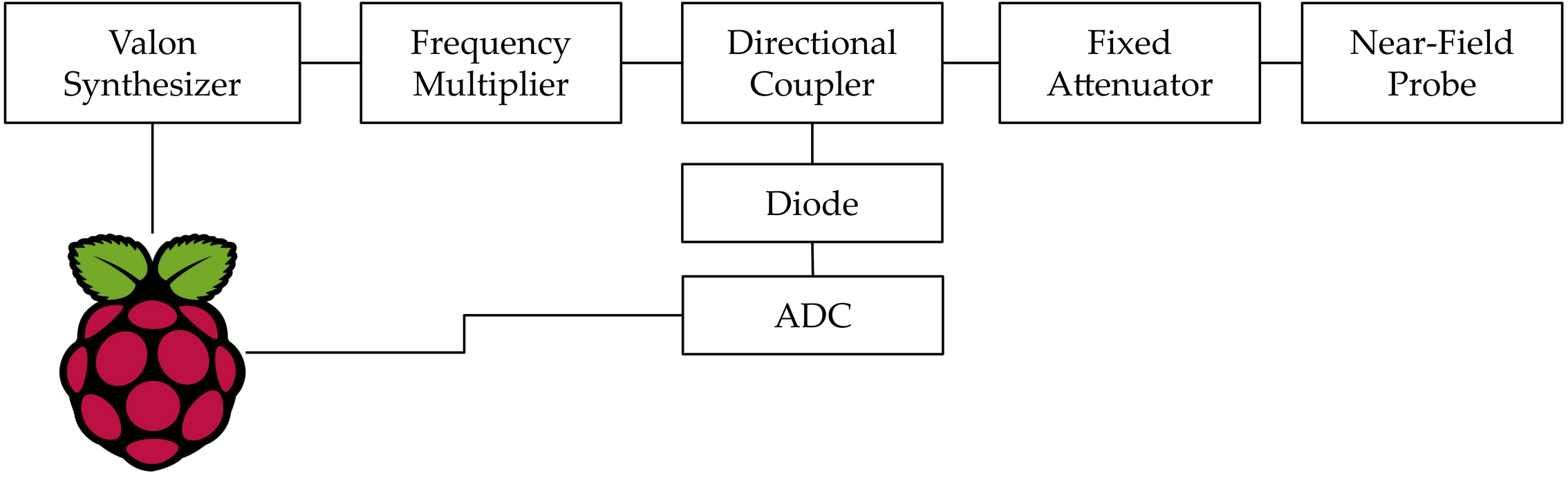
Valon Synthesizer
Frequency Multiplier
Directional Coupler
Fixed Attenuator
Near-Field Probe
Diode
ADC