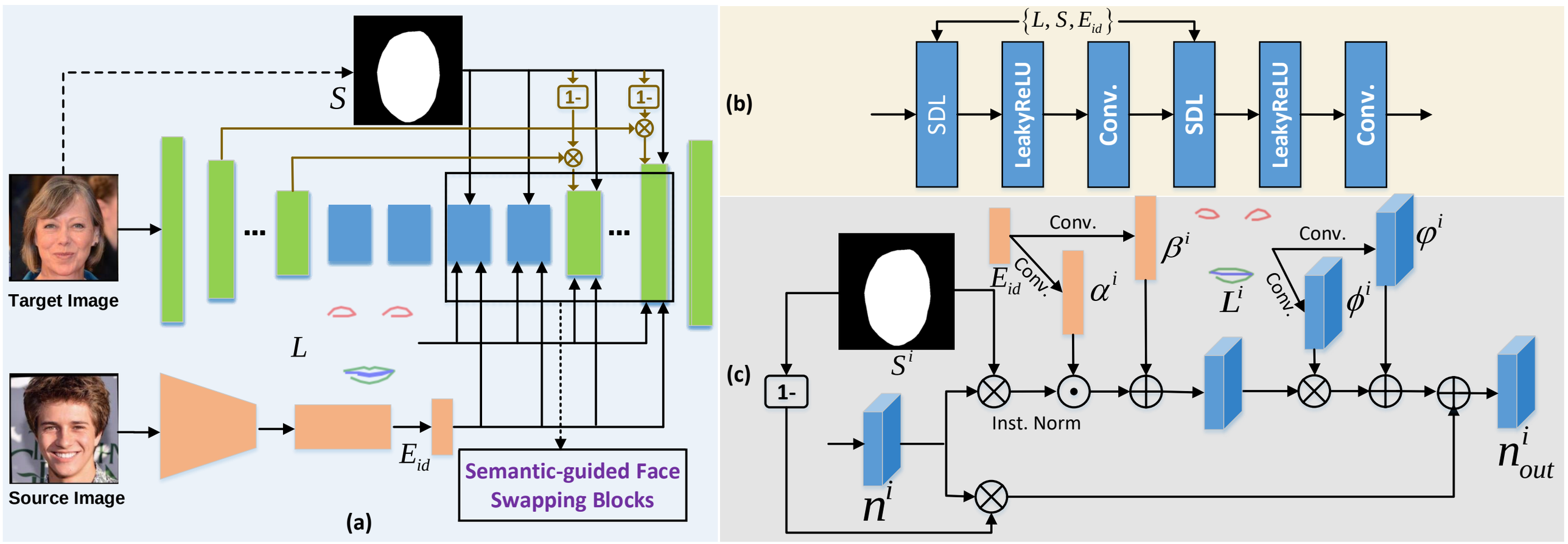
S
1-
1-
Target Image
L
Source Image
E_{id}
Semantic-guided Face Swapping Blocks
(a)
$\{L, S, E_{id}\}$
(b)
SDL
LeakyReLU
Conv.
SDL
LeakyReLU
Conv.
(c)
1-
S^i
E_{id}
Conv.
Conv.
α^i
β^i
L^i
Conv.
Conv.
ϕ^i
φ^i
Inst. Norm
n^i
n^i_{out}

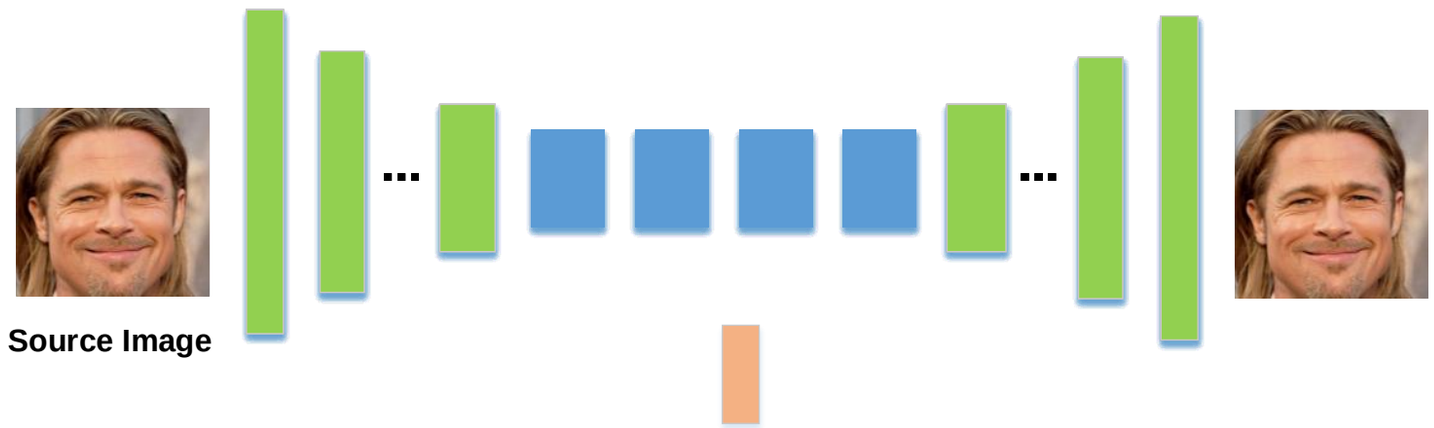
Source Image

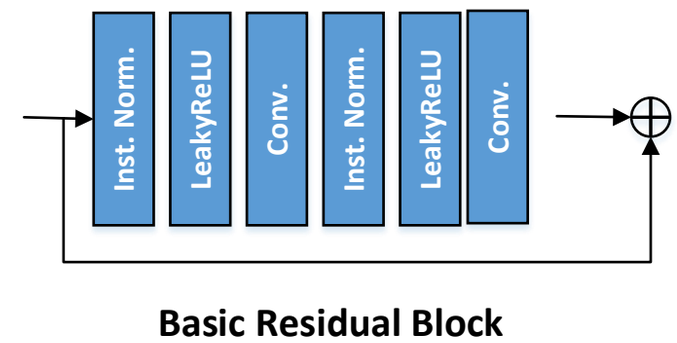
Inst. Norm.
LeakyReLU
Conv.
Inst. Norm.
LeakyReLU
Conv.
Basic Residual Block

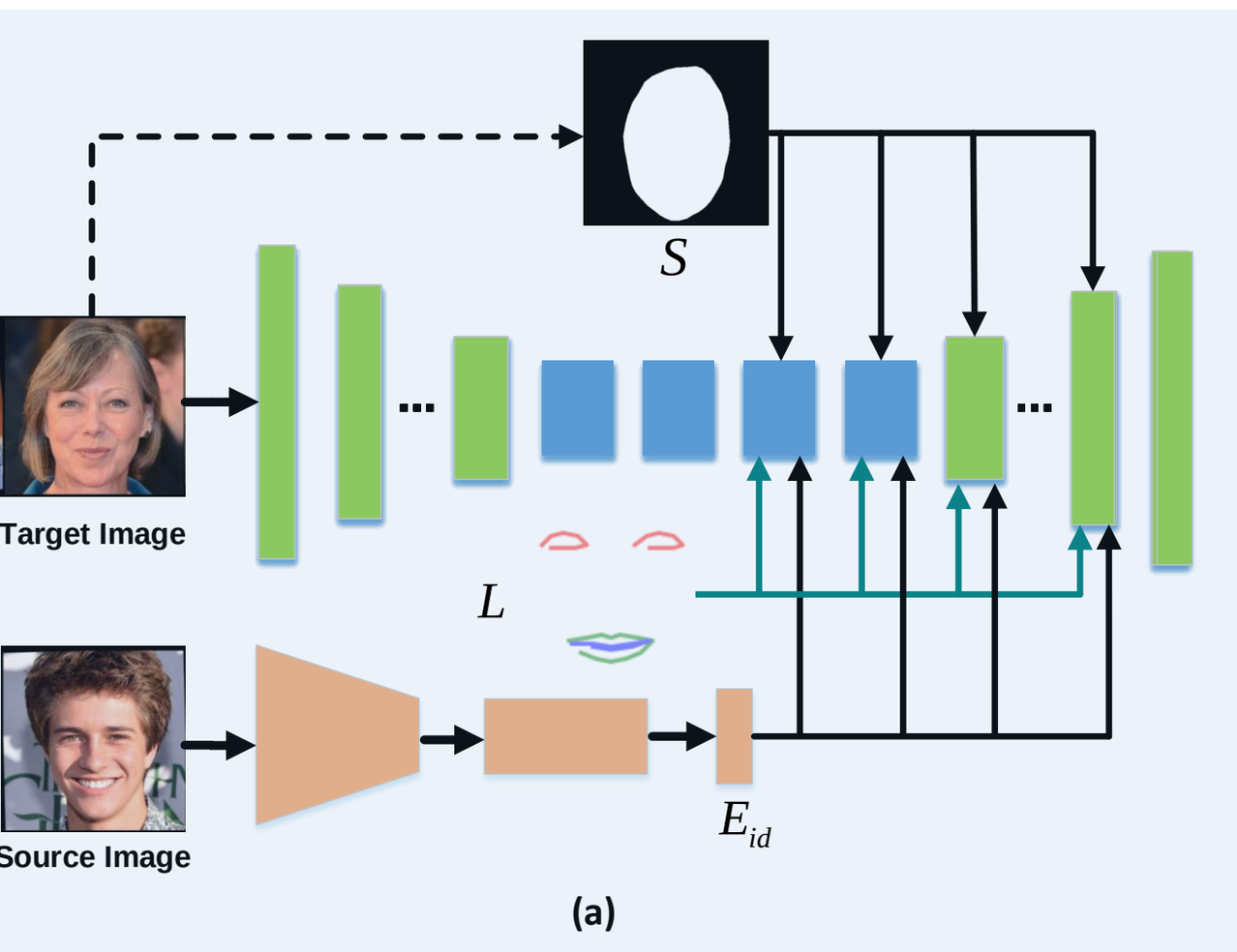
S
Target Image
L
Source Image
E_{id}
(a)

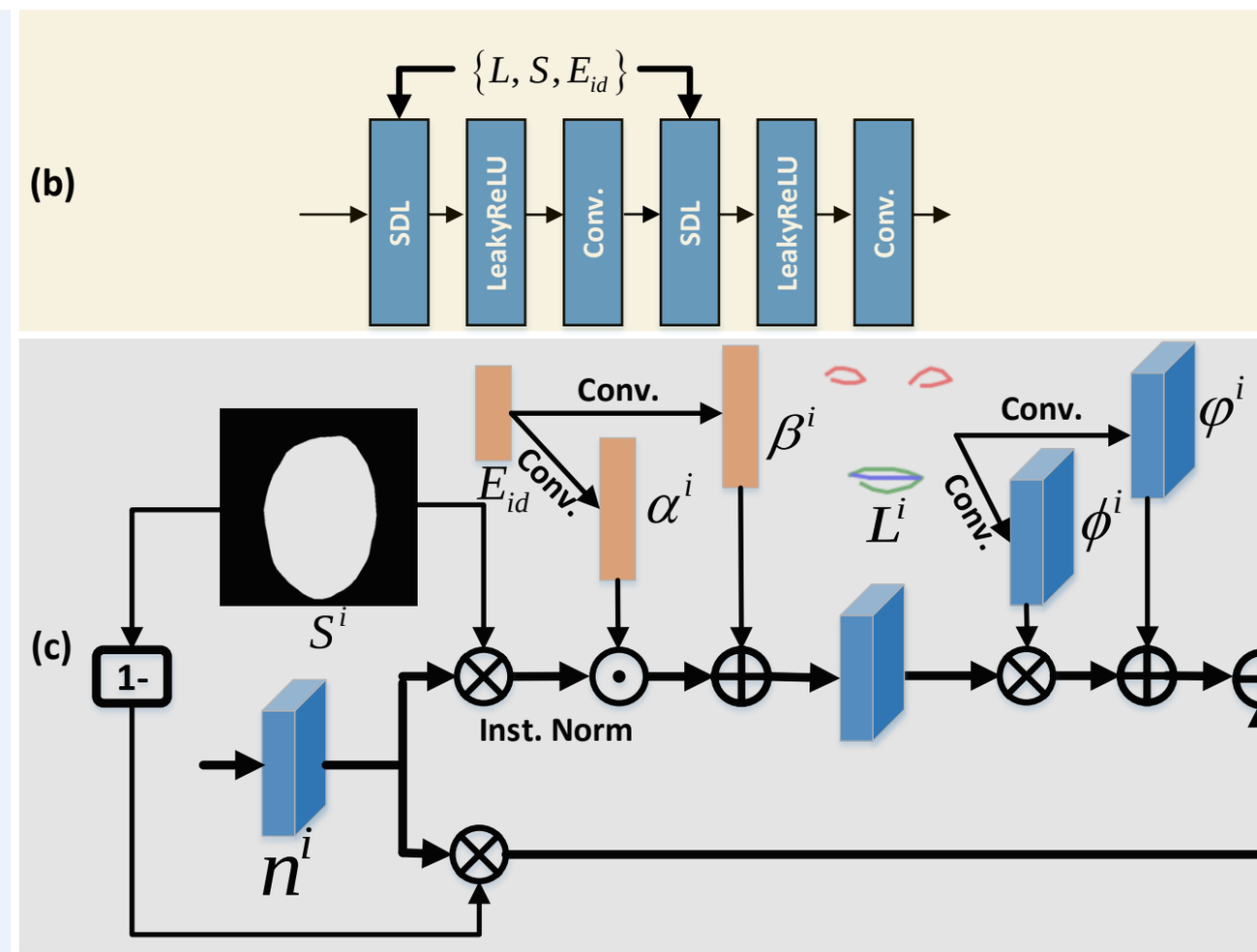
(b)
$\{L, S, E_{id}\}$
SDL
LeakyReLU
Conv.
SDL
LeakyReLU
Conv.
(c)
S^i
1-
n^i
E_{id}
Conv.
α^i
β^i
L^i
Conv.
ϕ^i
φ^i
Inst. Norm