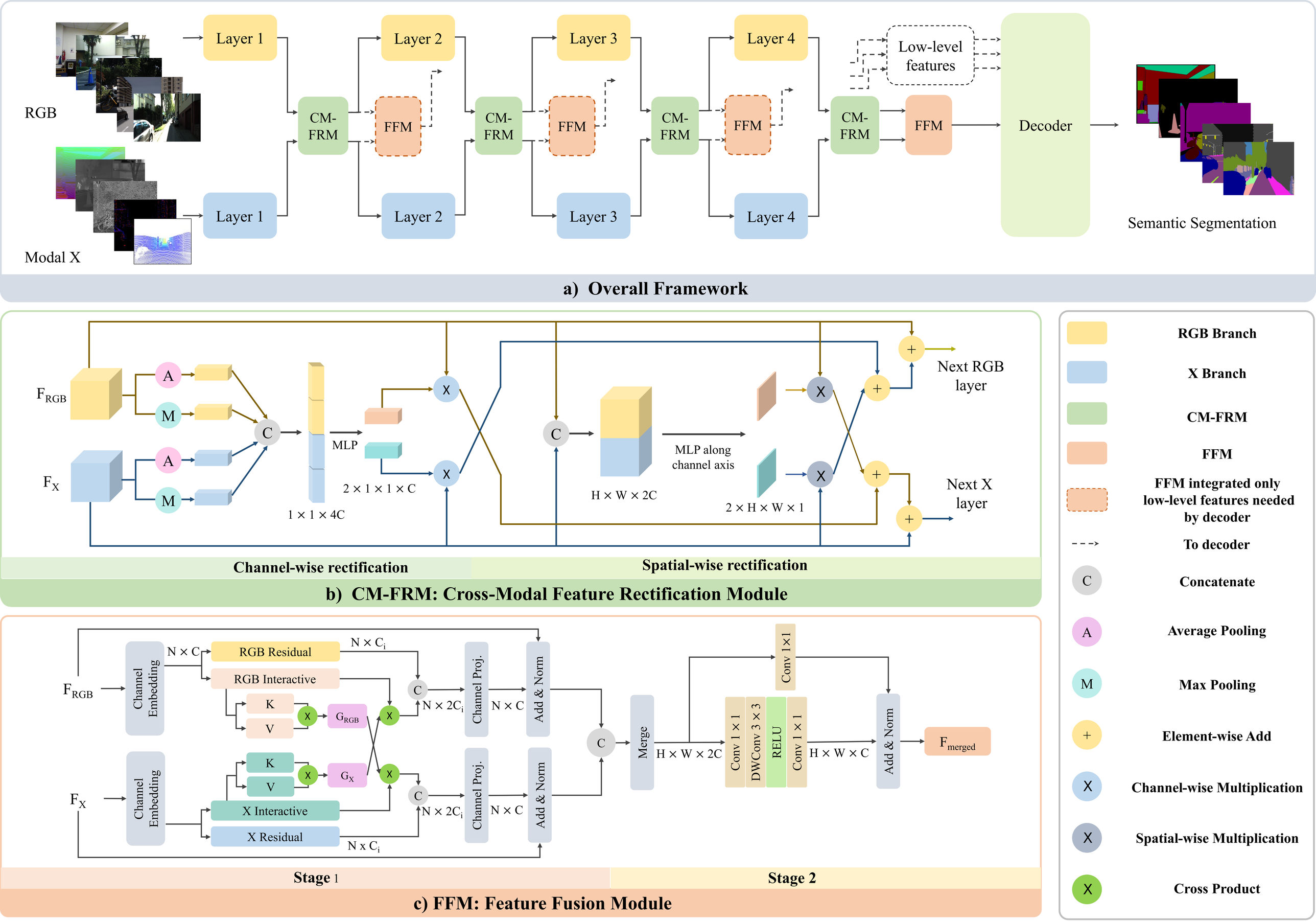
RGB
Modal X
Layer 1
Layer 2
Layer 3
Layer 4
CM-FRM
FFM
Low-level features
Decoder
Semantic Segmentation
a) Overall Framework
F_{RGB}
F_X
A
M
C
MLP
$2 \times 1 \times 1 \times C$
$1 \times 1 \times 4C$
$H \times W \times 2C$
MLP along channel axis
$2 \times H \times W \times 1$
Next RGB layer
Next X layer
Channel-wise rectification
Spatial-wise rectification
b) CM-FRM: Cross-Modal Feature Rectification Module
Channel Embedding
$N \times C$
RGB Residual
RGB Interactive
$N \times C_i$
K
V
G_{RGB}
G_X
X Interactive
X Residual
$N \times 2C_i$
Channel Proj.
$N \times C$
Add & Norm
Merge
$H \times W \times 2C$
Conv 1×1
Conv 1 × 1
DWConv 3 × 3
RELU
$H \times W \times C$
F_{merged}
Stage 1
Stage 2
c) FFM: Feature Fusion Module
RGB Branch
X Branch
CM-FRM
FFM
FFM integrated only low-level features needed by decoder
To decoder
Concatenate
Average Pooling
Max Pooling
Element-wise Add
Channel-wise Multiplication
Spatial-wise Multiplication
Cross Product