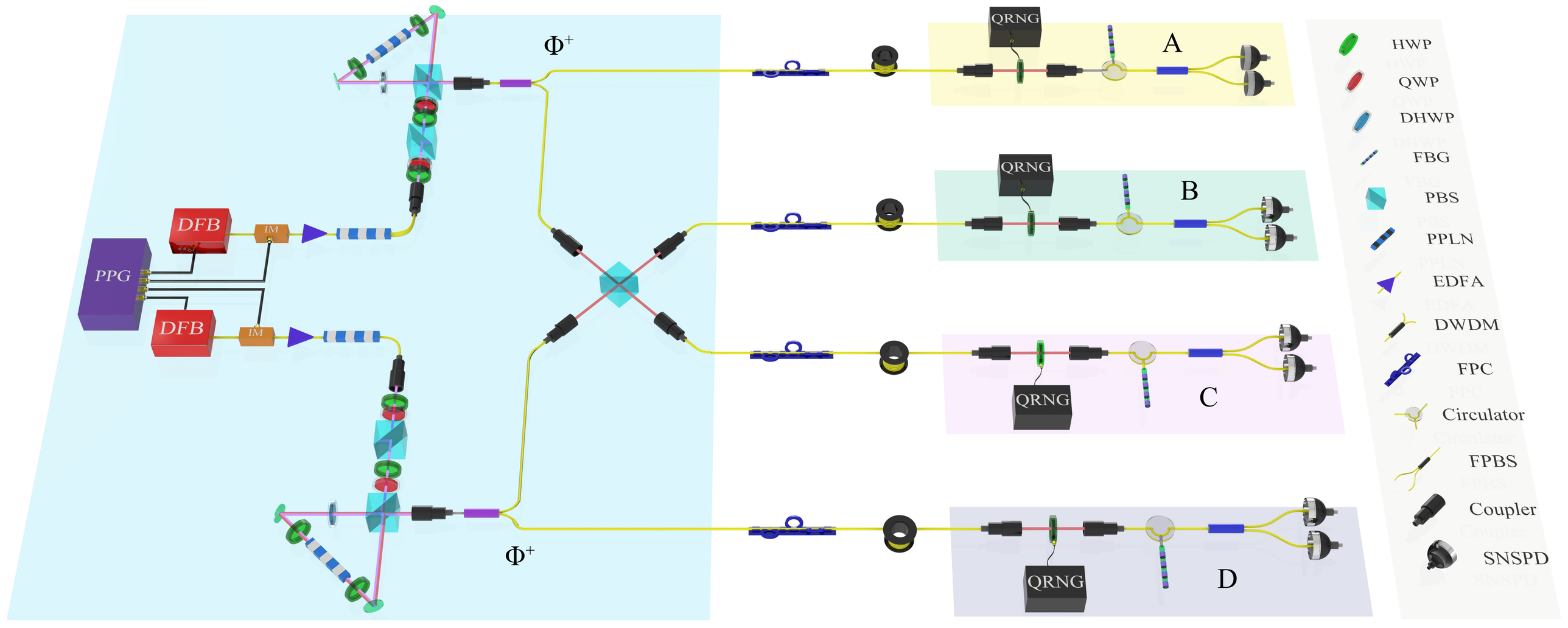
Φ+
Φ+
PPG
DFB
DFB
IM
IM
QRNG
QRNG
QRNG
QRNG
A
B
C
D
HWP
QWP
DHWP
FBG
PBS
PPLN
EDFA
DWDM
FPC
Circulator
FPBS
Coupler
SNSPD