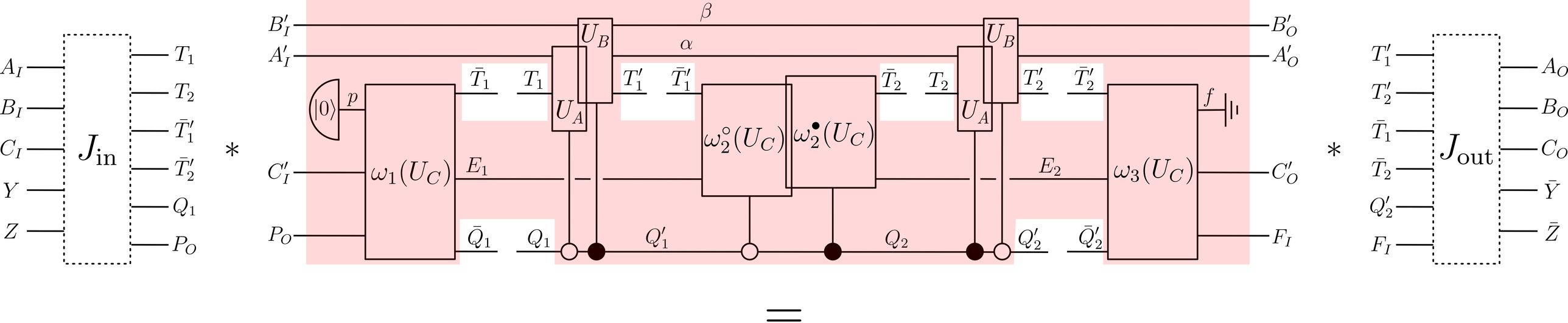
A_I
B_I
C_I
Y
Z
J_{in}
T_1
T_2
$\bar{T}_1'$
$\bar{T}_2'$
Q_1
P_O
*
B_I'
A_I'
C_I'
P_O
$|0\rangle$
p
$\omega_1(U_C)$
$\bar{T}_1$
T_1
E_1
$\bar{Q}_1$
Q_1
U_A
U_B
β
α
T_1'
$\bar{T}_1'$
Q_1'
$\omega_2^{\circ}(U_C)$
$\omega_2^{\bullet}(U_C)$
$\bar{T}_2$
T_2
Q_2
T_2'
$\bar{T}_2'$
E_2
Q_2'
$\bar{Q}_2'$
$\omega_3(U_C)$
f
B_O'
A_O'
C_O'
F_I
*
T_1'
T_2'
$\bar{T}_1$
$\bar{T}_2$
Q_2'
F_I
J_{out}
A_O
B_O
C_O
$\bar{Y}$
$\bar{Z}$

=

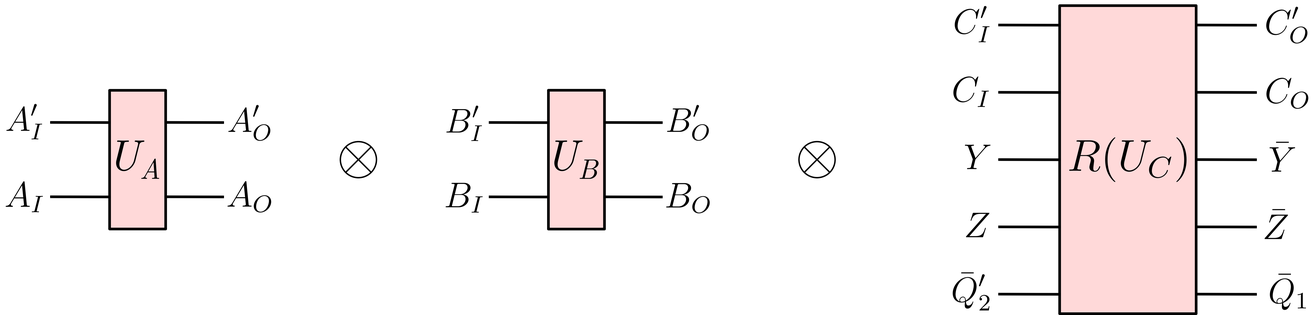
A_I'
A_I
U_A
A_O'
A_O
$\otimes$
B_I'
B_I
U_B
B_O'
B_O
$\otimes$
C_I'
C_I
Y
Z
$\bar{Q}_2'$
$R(U_C)$
C_O'
C_O
$\bar{Y}$
$\bar{Z}$
$\bar{Q}_1$