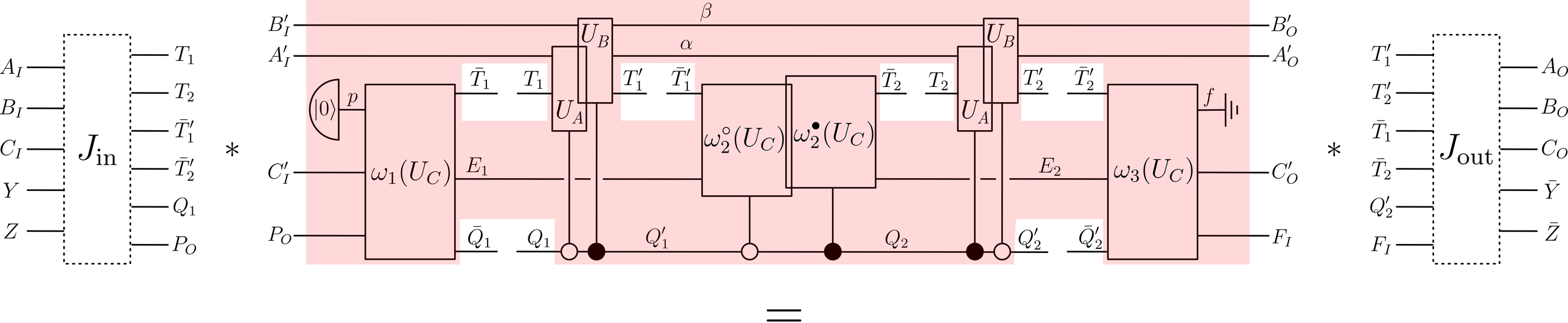
A_I
B_I
C_I
Y
Z
J_{in}
T_1
T_2
$\bar{T}'_1$
$\bar{T}'_2$
Q_1
P_O
*
B'_I
A'_I
C'_I
P_O
$|0\rangle$
p
$\omega_1(U_C)$
$\bar{T}_1$
T_1
E_1
$\bar{Q}_1$
Q_1
U_A
U_B
β
α
T'_1
$\bar{T}'_1$
Q'_1
$\omega_2^{\circ}(U_C)$
$\omega_2^{\bullet}(U_C)$
$\bar{T}_2$
T_2
Q_2
T'_2
$\bar{T}'_2$
Q'_2
$\bar{Q}'_2$
E_2
$\omega_3(U_C)$
f
B'_O
A'_O
C'_O
F_I
*
T'_1
T'_2
$\bar{T}_1$
$\bar{T}_2$
Q'_2
F_I
J_{out}
A_O
B_O
C_O
$\bar{Y}$
$\bar{Z}$

$=$

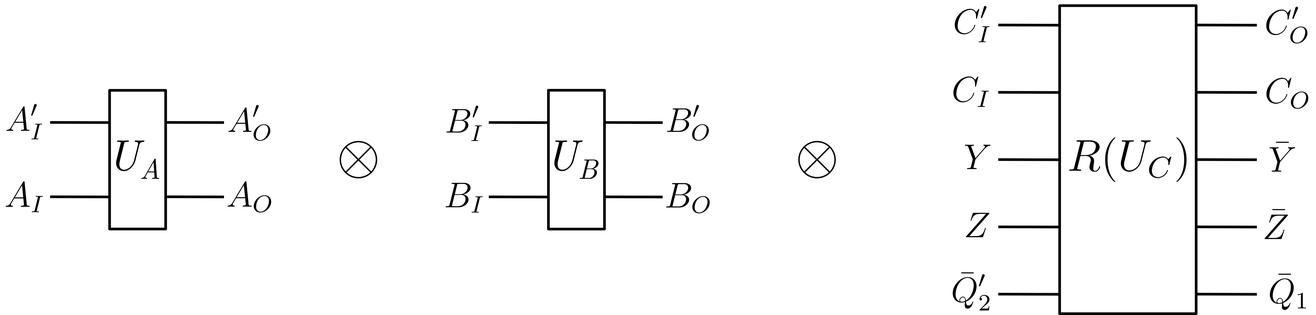
A'_I
A_I
U_A
A'_O
A_O
$\otimes$
B'_I
B_I
U_B
B'_O
B_O
$\otimes$
C'_I
C_I
Y
Z
$\bar{Q}'_2$
$R(U_C)$
C'_O
C_O
$\bar{Y}$
$\bar{Z}$
$\bar{Q}_1$