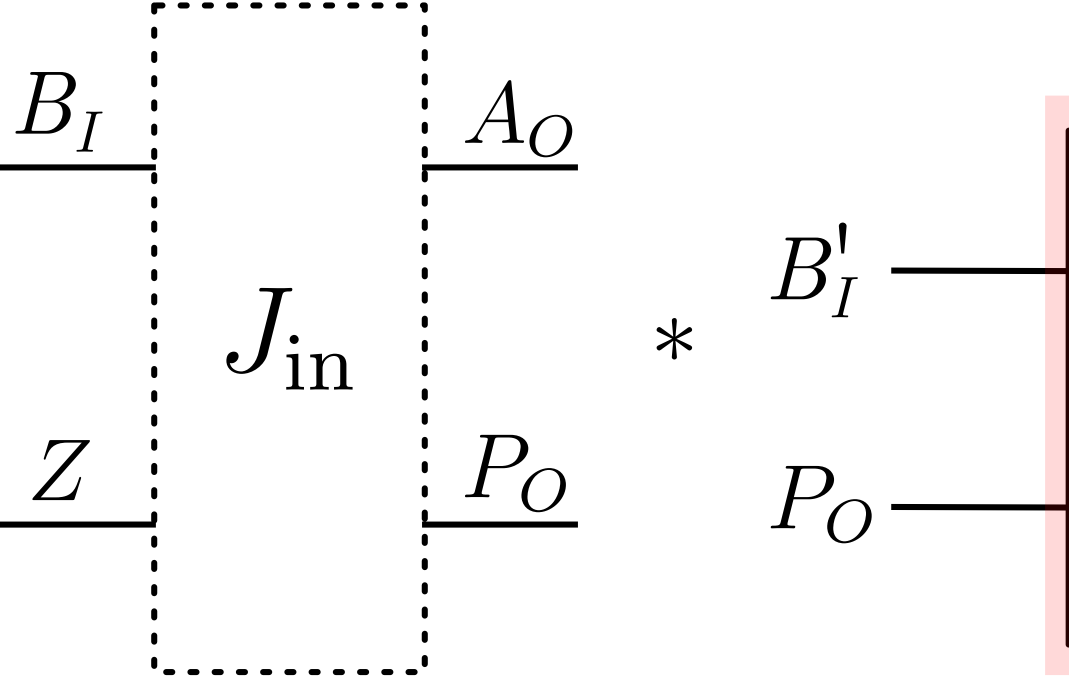
B_I
Z
J_{in}
A_O
P_O
$*$
B_I'
P_O

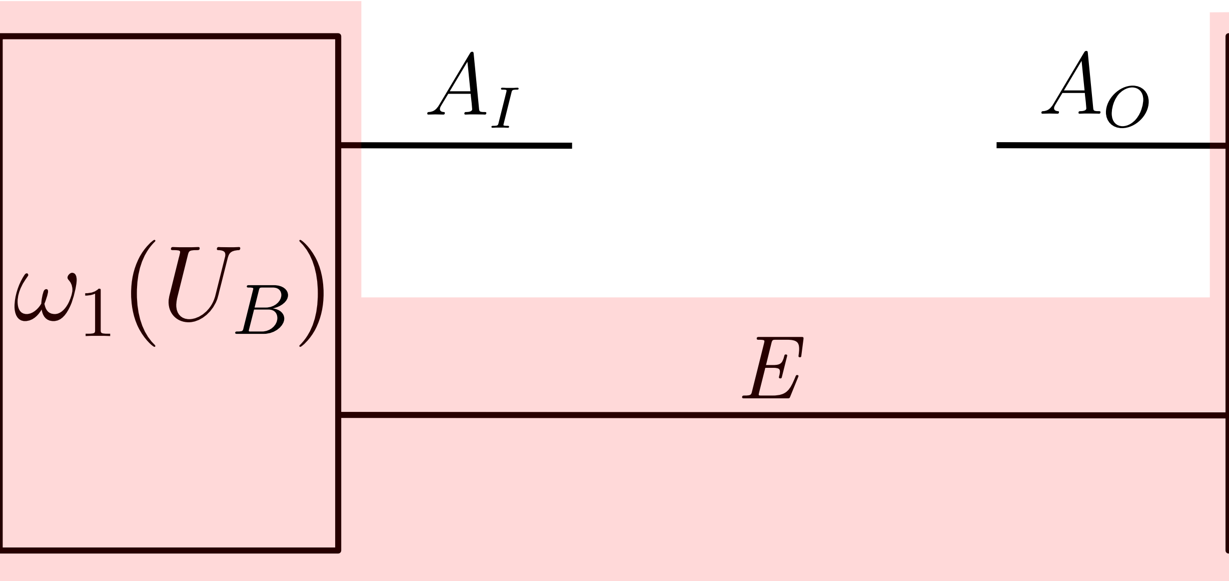
$\omega_1(U_B)$
A_I
A_O
E

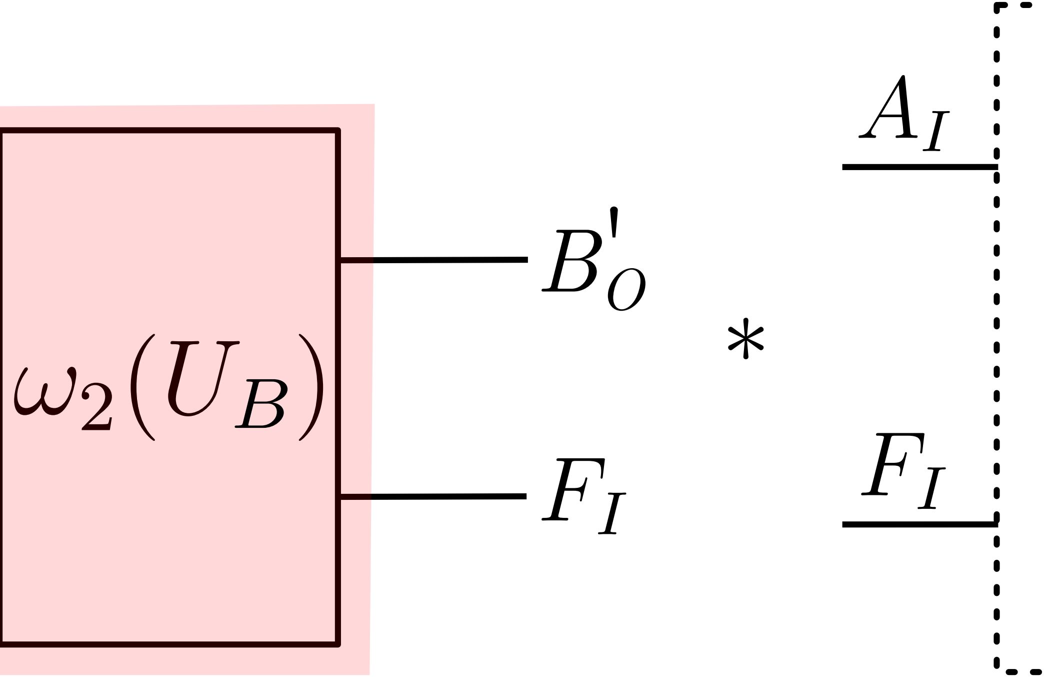
$\omega_2(U_B)$
B'_O
F_I
$*$
A_I
F_I

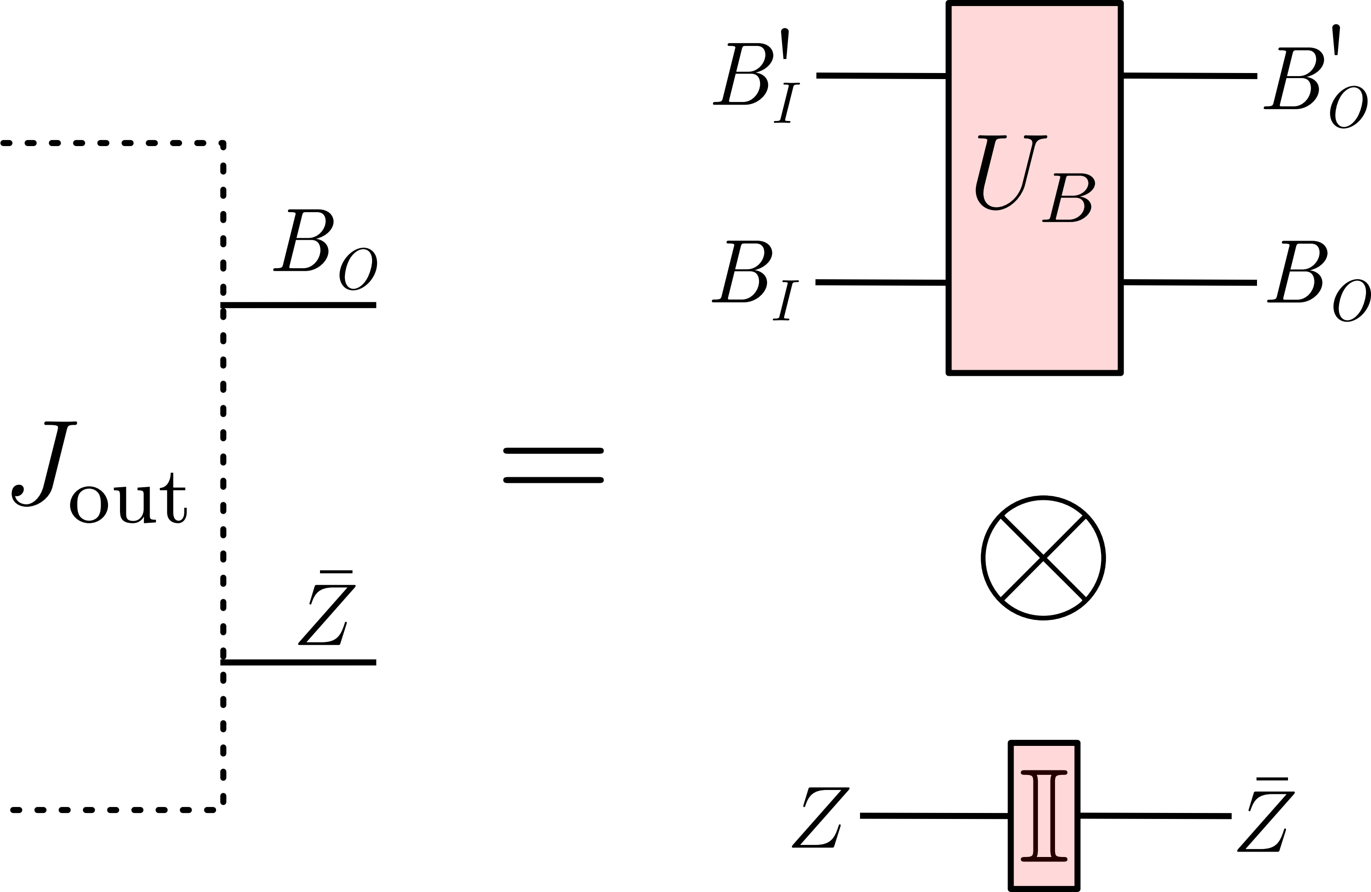
J_{out}
B_O
$\bar{Z}$
$=$
B_I'
B_I
U_B
B_O'
B_O
$\otimes$
Z
$\mathbb{I}$
$\bar{Z}$