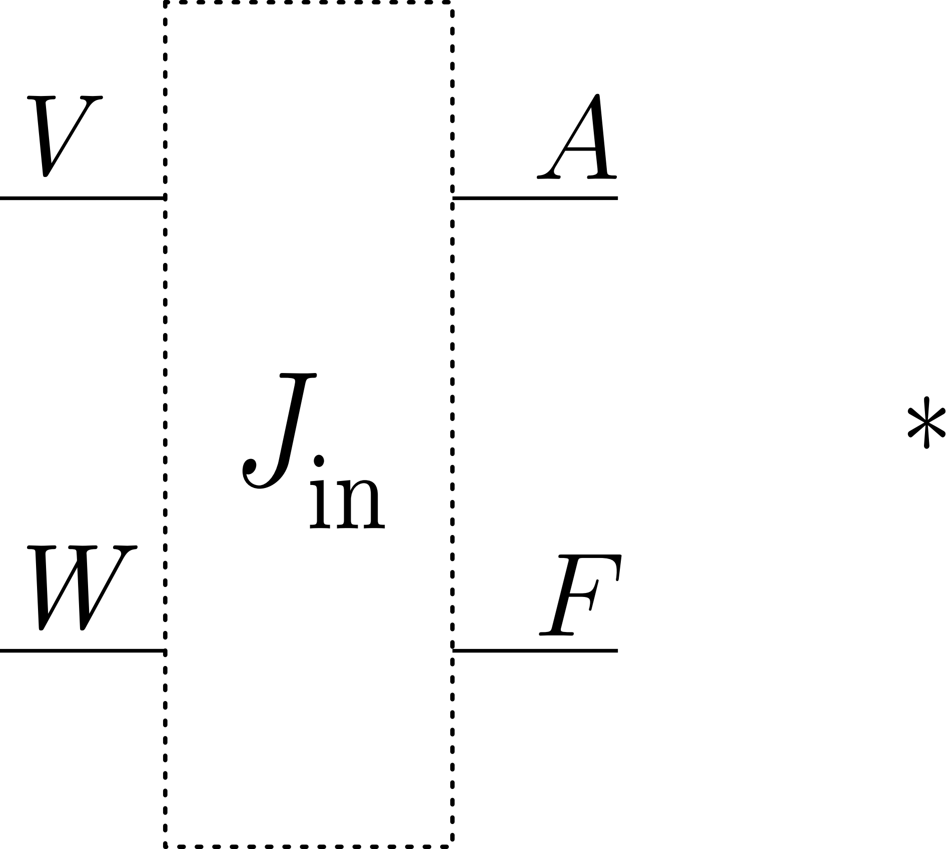
V
A
J_{in}
$*$
W
F

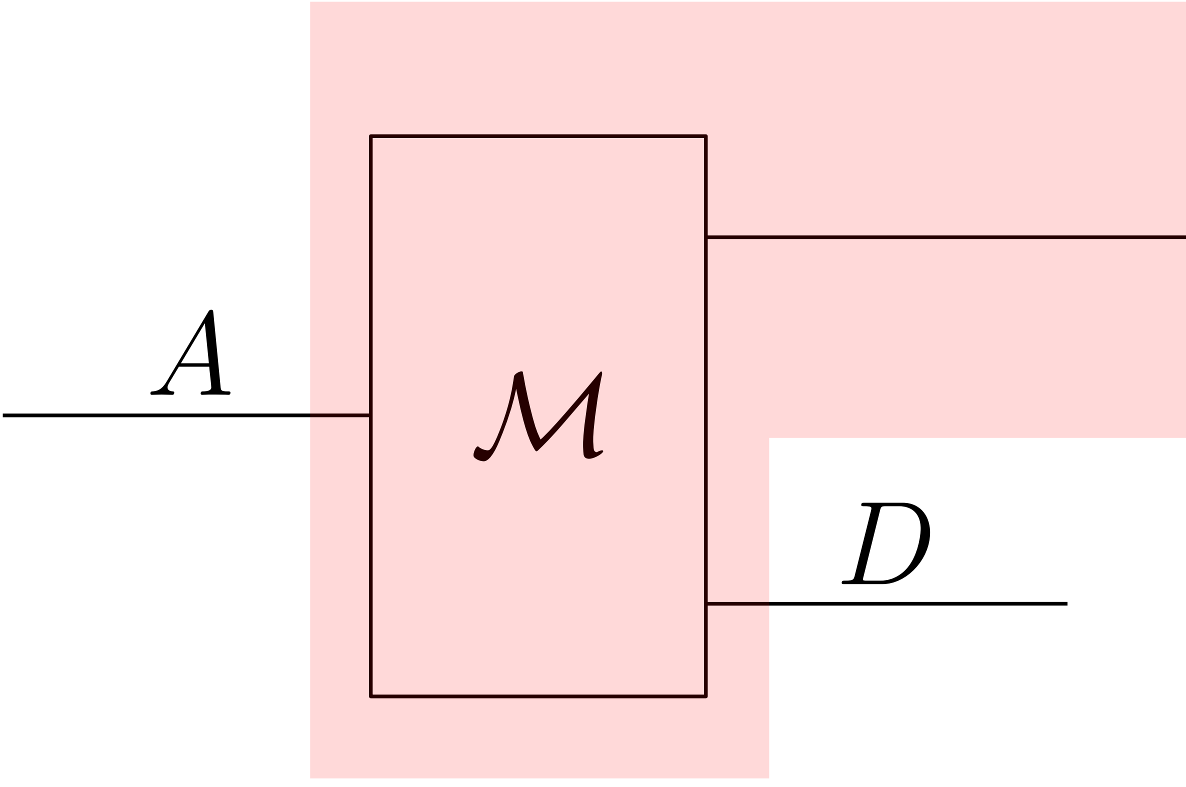
A
$\mathcal{M}$
D

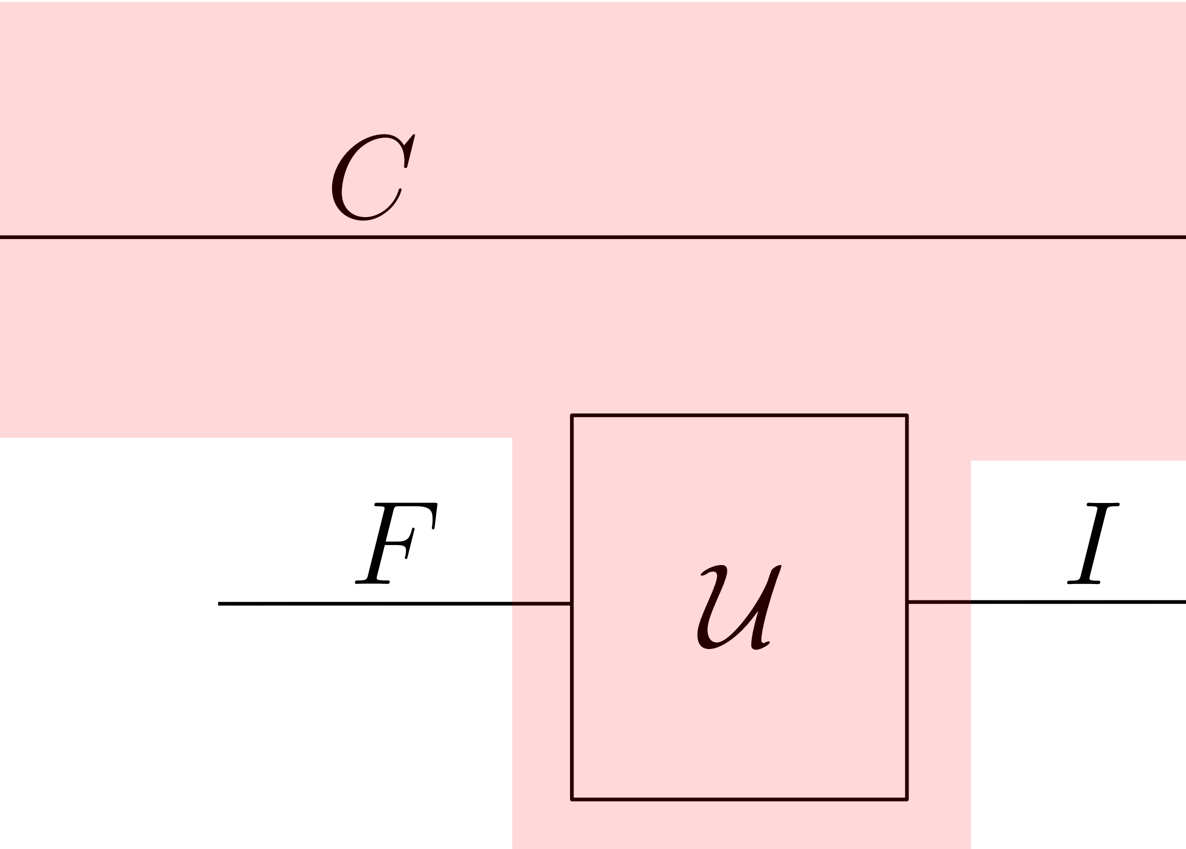
C
F
u
I

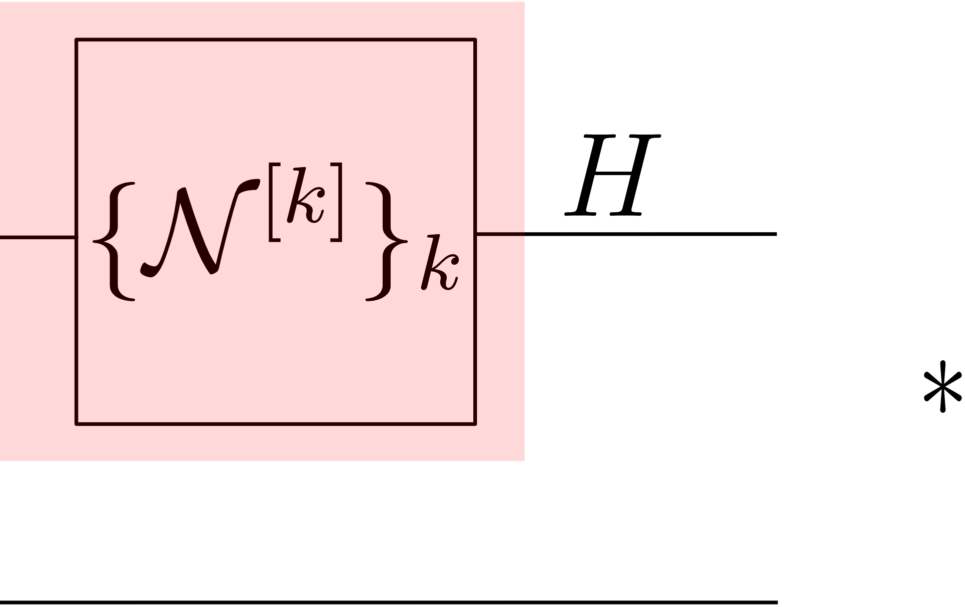
$\{\mathcal{N}^{[k]}\}_k$
H
$*$

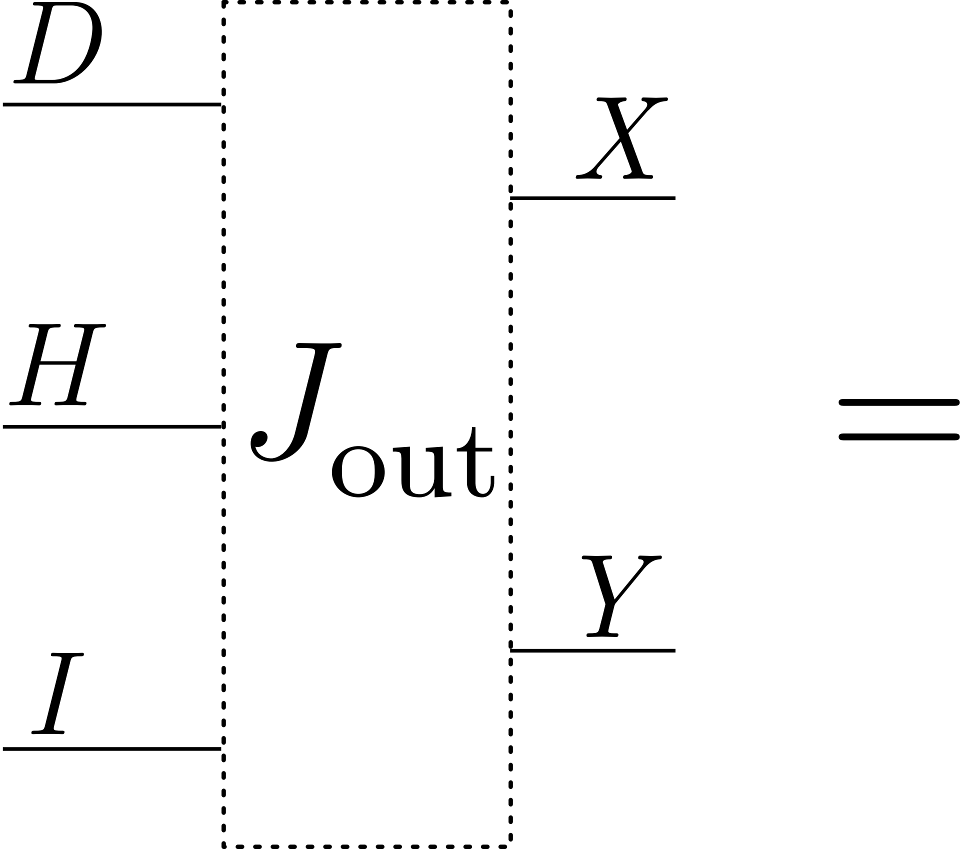

D
H
I
J_{out}
X
Y
=

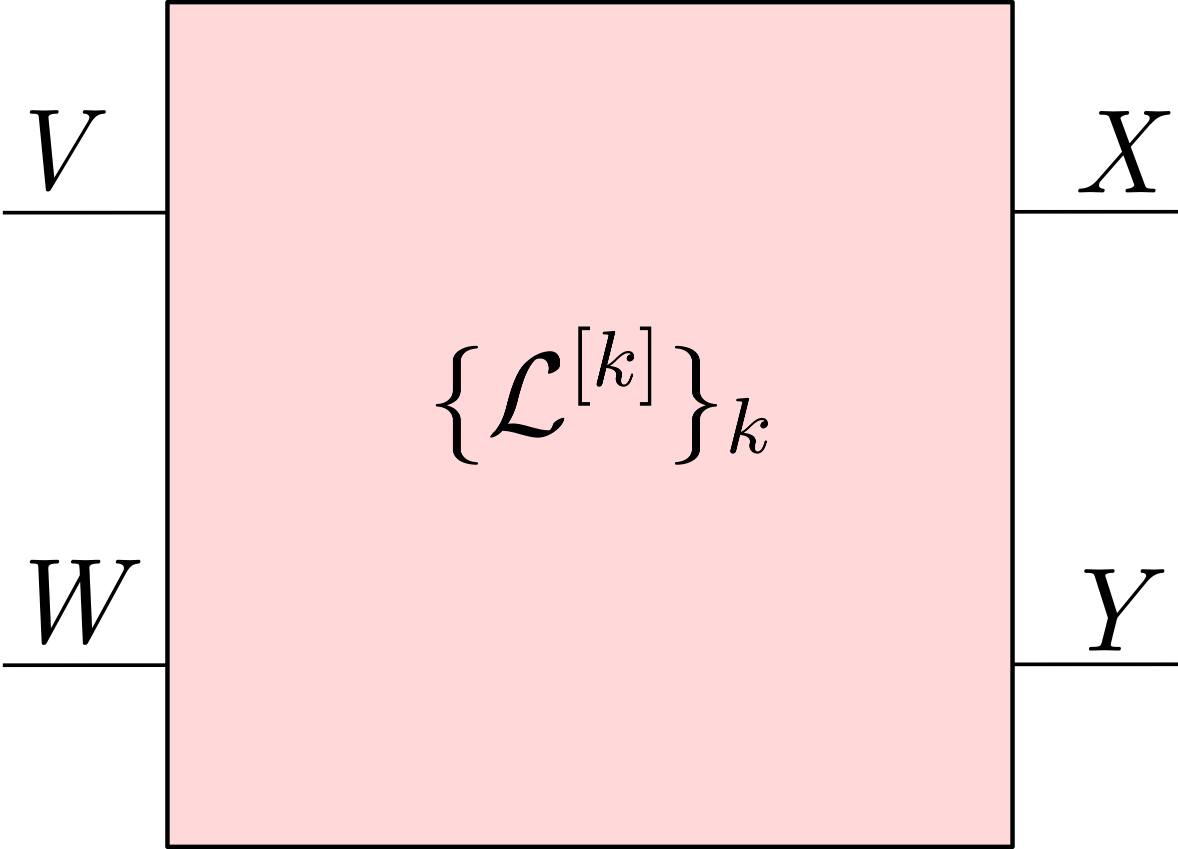
V
W
$\{\mathcal{L}^{[k]}\}_k$
X
Y