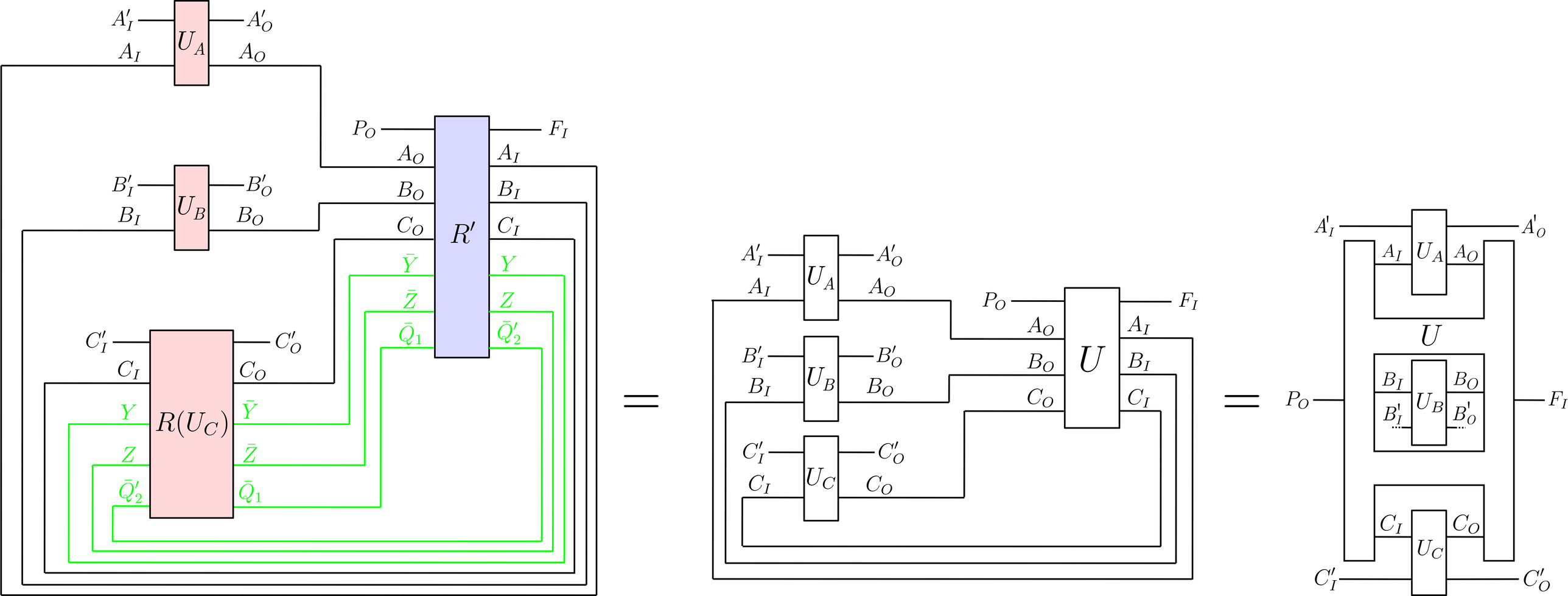
A'_I
A'_O
A_I
U_A
A_O
P_O
F_I
A_O
A_I
B'_I
B'_O
B_I
U_B
B_O
B_O
B_I
C_O
R'
C_I
$\bar{Y}$
Y
$\bar{Z}$
Z
$\bar{Q}_1$
$\bar{Q}'_2$
C'_I
C'_O
C_I
C_O
Y
$R(U_C)$
$\bar{Y}$
Z
$\bar{Z}$
$\bar{Q}'_2$
$\bar{Q}_1$
=
A'_I
A'_O
A_I
U_A
A_O
P_O
F_I
A_O
A_I
B'_I
B'_O
B_I
U_B
B_O
B_O
U
B_I
C_O
C_I
C'_I
C'_O
C_I
U_C
C_O
=
A'_I
A'_O
A_I
U_A
A_O
U
P_O
B_I
U_B
B_O
B'_I
B'_O
F_I
C_I
U_C
C_O
C'_I
C'_O