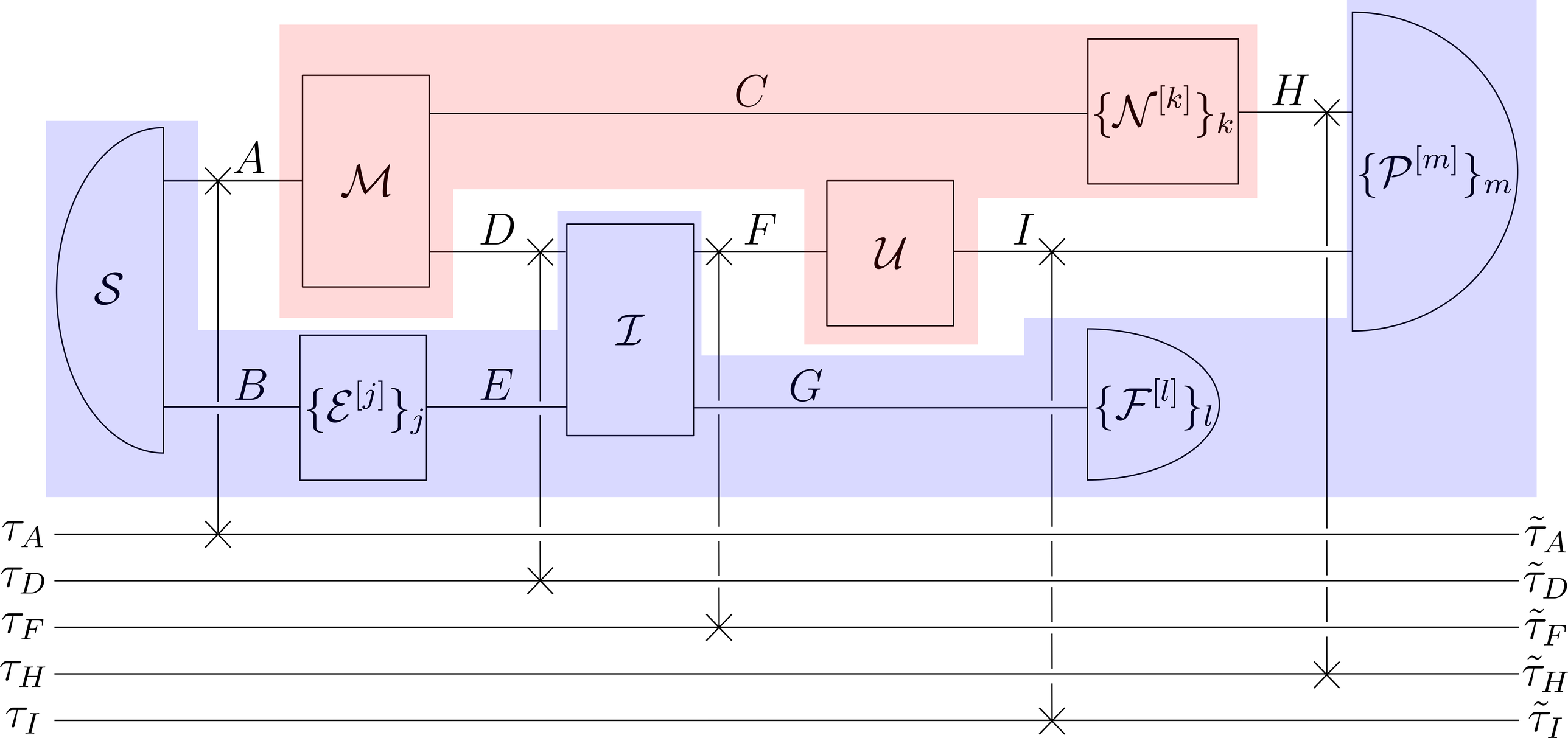
$\mathcal{S}$
A
B
$\mathcal{M}$
C
D
$\{\mathcal{E}^{[j]}\}_j$
E
$\mathcal{I}$
F
$\mathcal{U}$
G
I
$\{\mathcal{N}^{[k]}\}_k$
H
$\{\mathcal{F}^{[l]}\}_l$
$\{\mathcal{P}^{[m]}\}_m$
τ_A
τ_D
τ_F
τ_H
τ_I
$\tilde{\tau}_A$
$\tilde{\tau}_D$
$\tilde{\tau}_F$
$\tilde{\tau}_H$
$\tilde{\tau}_I$