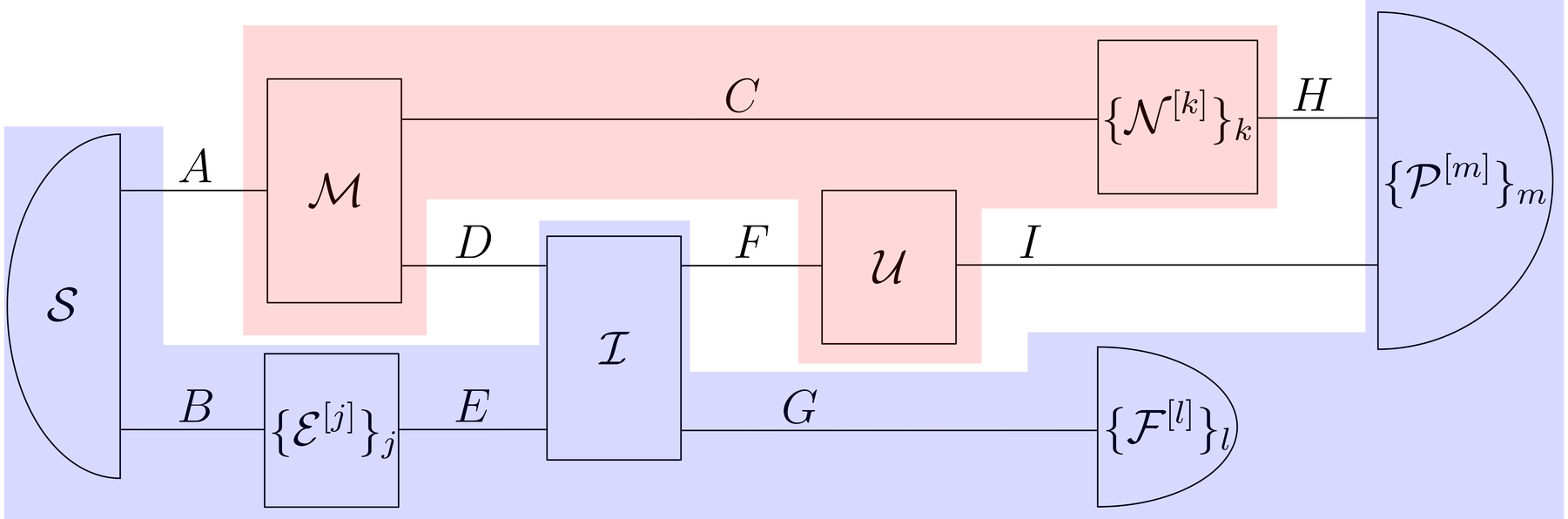
$\mathcal{S}$
A
$\mathcal{M}$
C
$\{\mathcal{N}^{[k]}\}_k$
H
$\{\mathcal{P}^{[m]}\}_m$
D
F
$\mathcal{U}$
I
$\mathcal{I}$
B
$\{\mathcal{E}^{[j]}\}_j$
E
G
$\{\mathcal{F}^{[l]}\}_l$