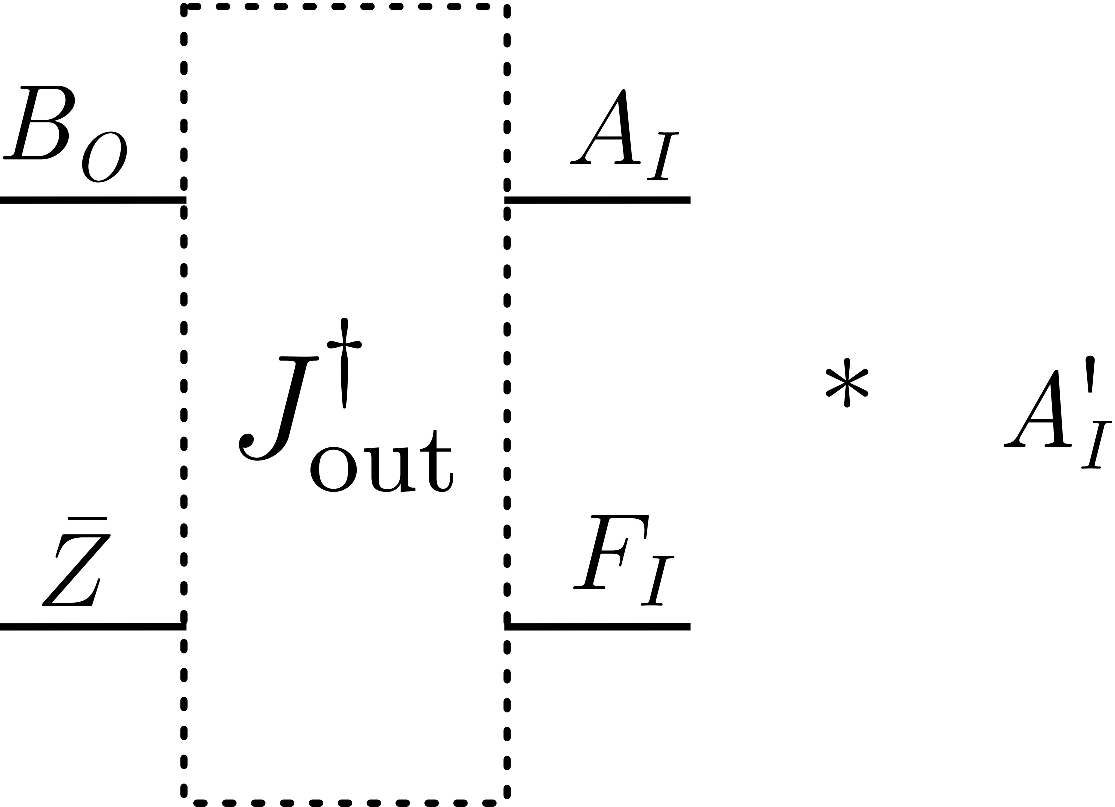
B_O
$\bar{Z}$
$J_{\text{out}}^\dagger$
A_I
F_I
$*$
A'_I

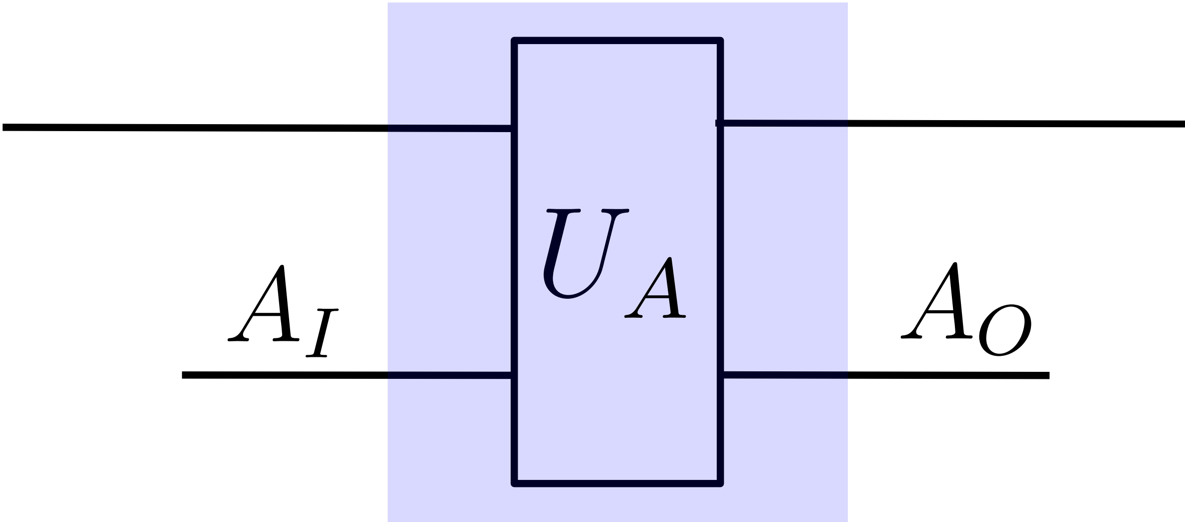
A_I
U_A
A_O

$-A'_O \quad *$

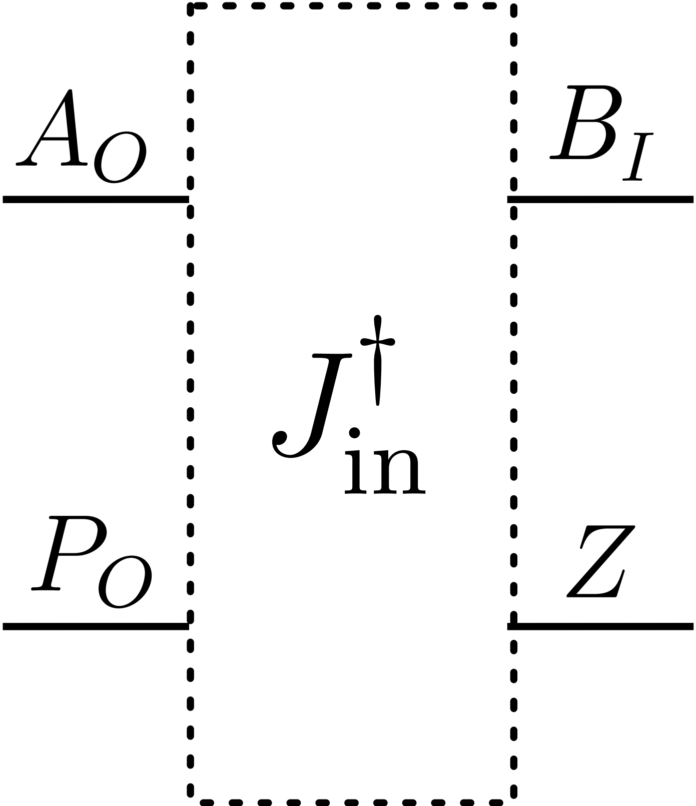
A_O
B_I
$J_{\mathrm{in}}^{\dagger}$
P_O
Z

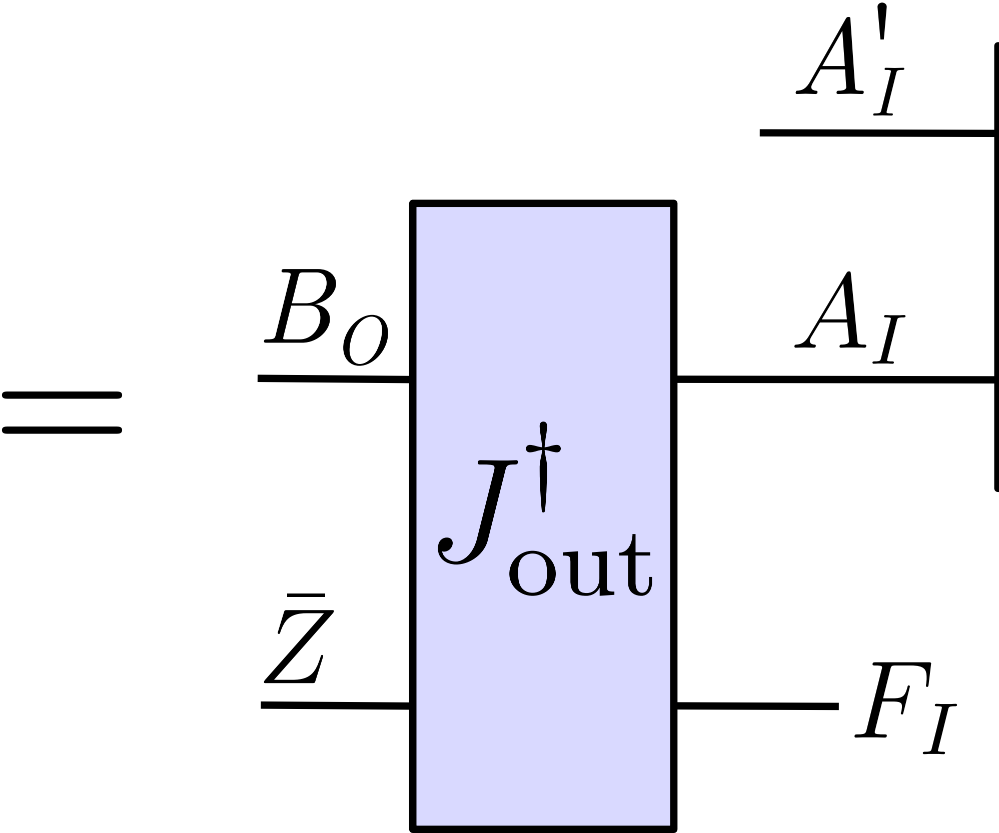
=
A_I'
B_O
A_I
$J_{\mathrm{out}}^{\dagger}$
$\bar{Z}$
F_I

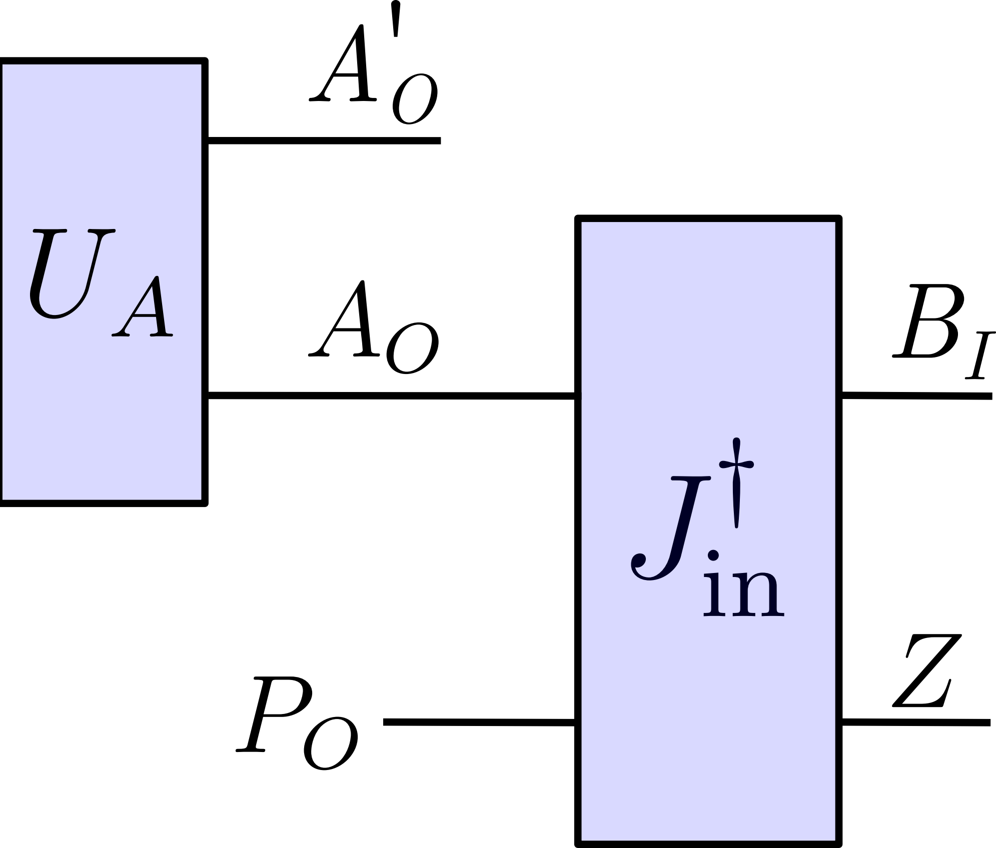
U_A
A_O'
A_O
$J_{\mathrm{in}}^{\dagger}$
B_I
Z
P_O