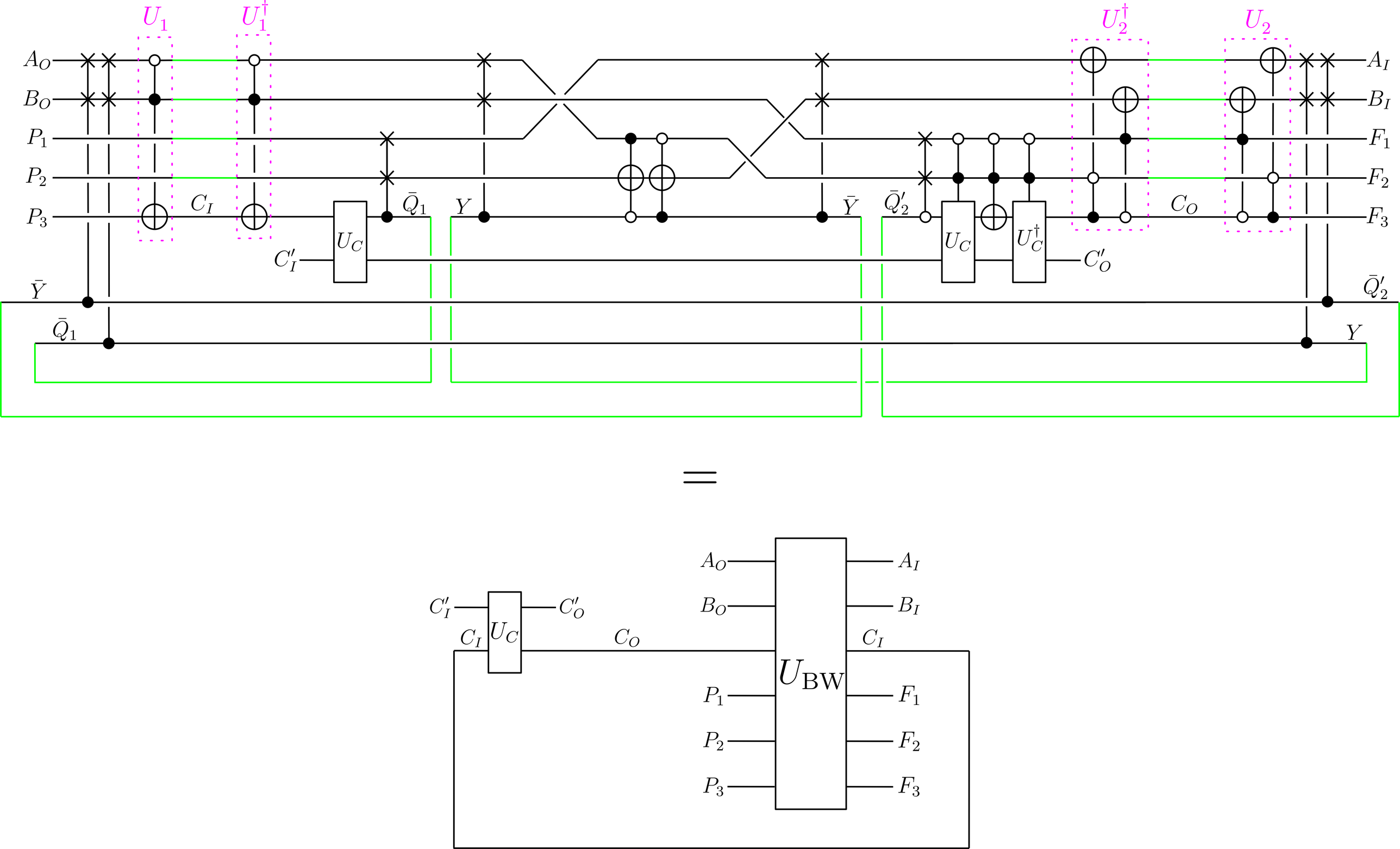
U_1
$U_1^\dagger$
$U_2^\dagger$
U_2
A_O
B_O
P_1
P_2
P_3
$\bar{Y}$
$\bar{Q}_1$
C_I
C'_I
U_C
$\bar{Q}_1$
Y
$\bar{Y}$
$\bar{Q}'_2$
U_C
$U_C^\dagger$
C'_O
C_O
A_I
B_I
F_1
F_2
F_3
$\bar{Q}'_2$
Y
=
C'_I
C_I
U_C
C'_O
C_O
A_O
B_O
P_1
P_2
P_3
U_{BW}
A_I
B_I
C_I
F_1
F_2
F_3