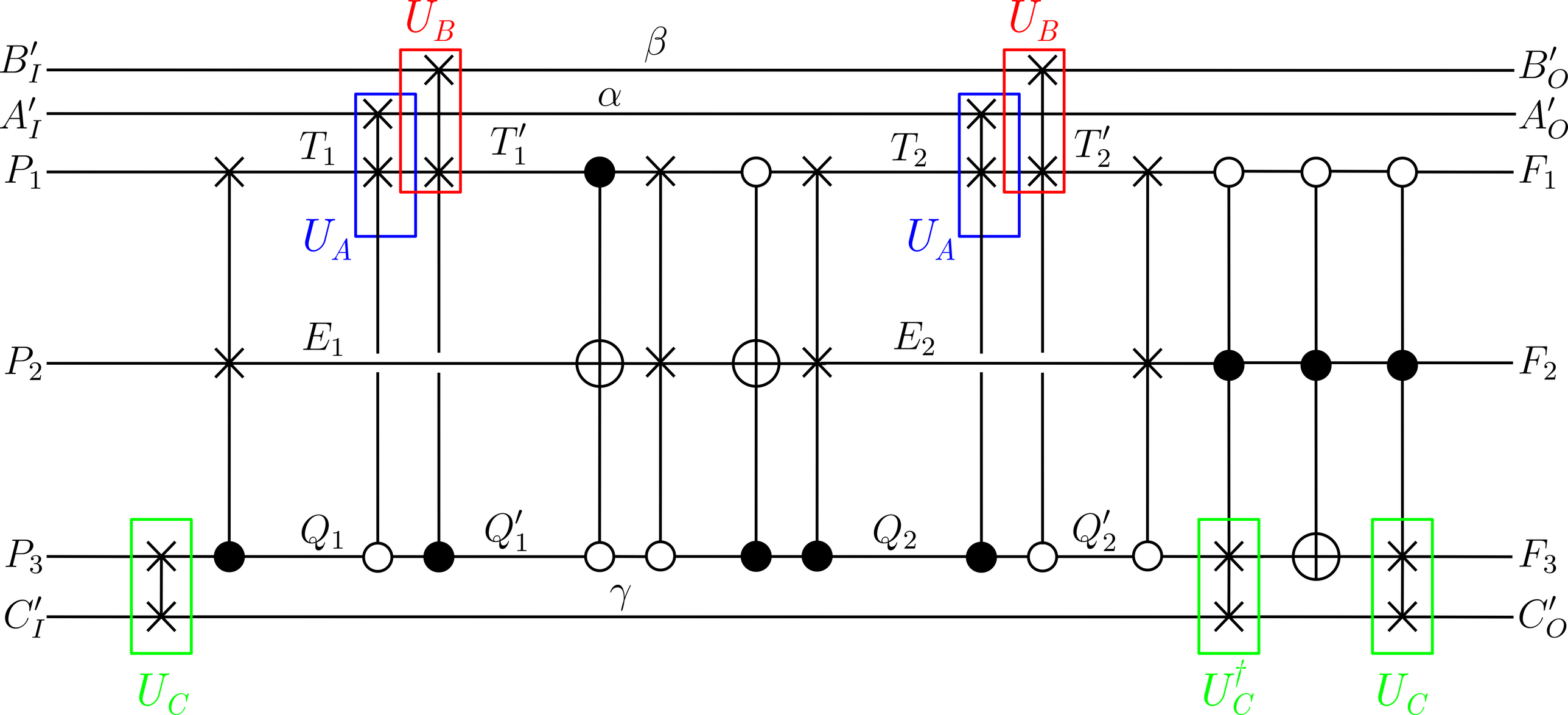
U_B
U_B
β
B'_I
B'_O
α
A'_I
A'_O
T_1
T'_1
T_2
T'_2
P_1
F_1
U_A
U_A
E_1
E_2
P_2
F_2
Q_1
Q'_1
Q_2
Q'_2
P_3
F_3
γ
C'_I
C'_O
U_C
$U_C^\dagger$
U_C