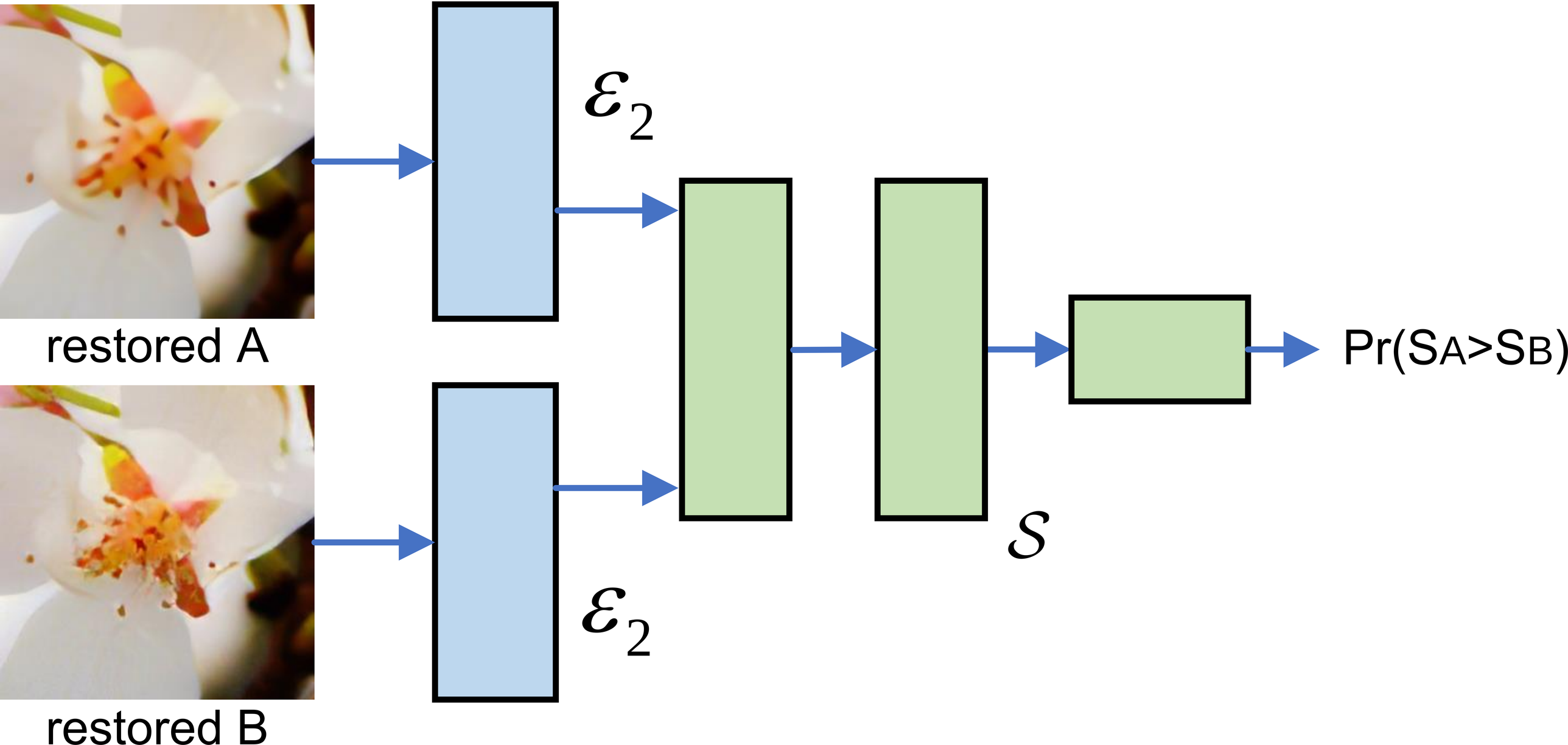
restored A
restored B
$\mathcal{E}_2$
$\mathcal{E}_2$
$\mathcal{S}$
Pr(SA>SB)