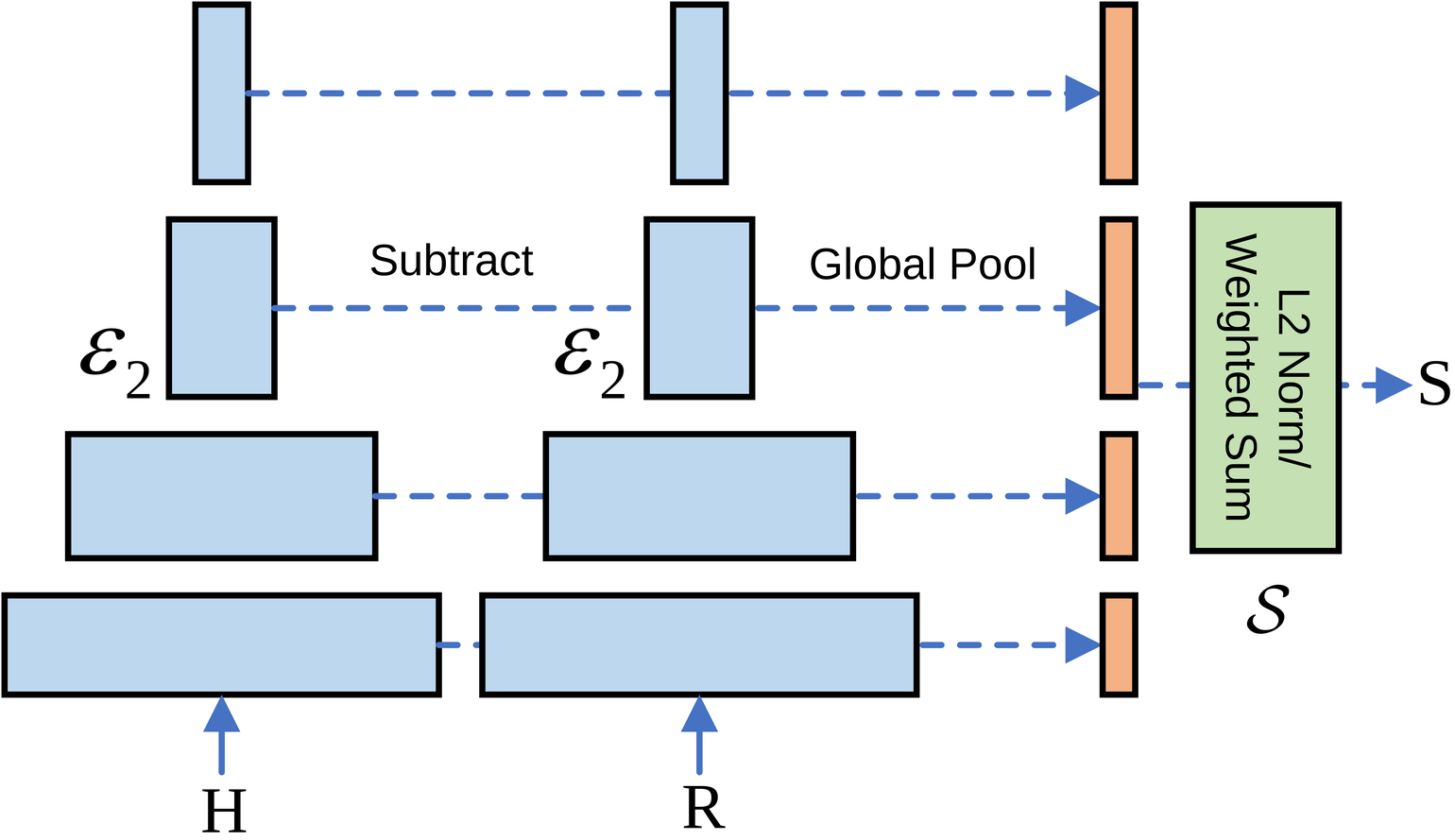

(a) FR-IQA Models

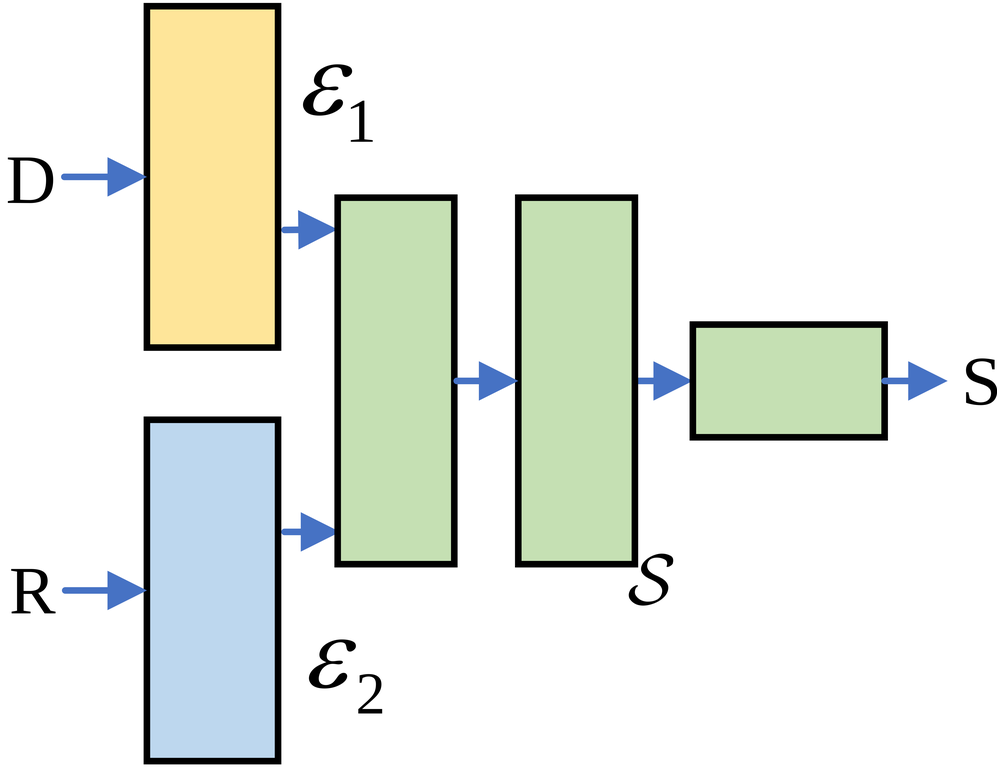

(b) DR-IQA Model (DPEN)