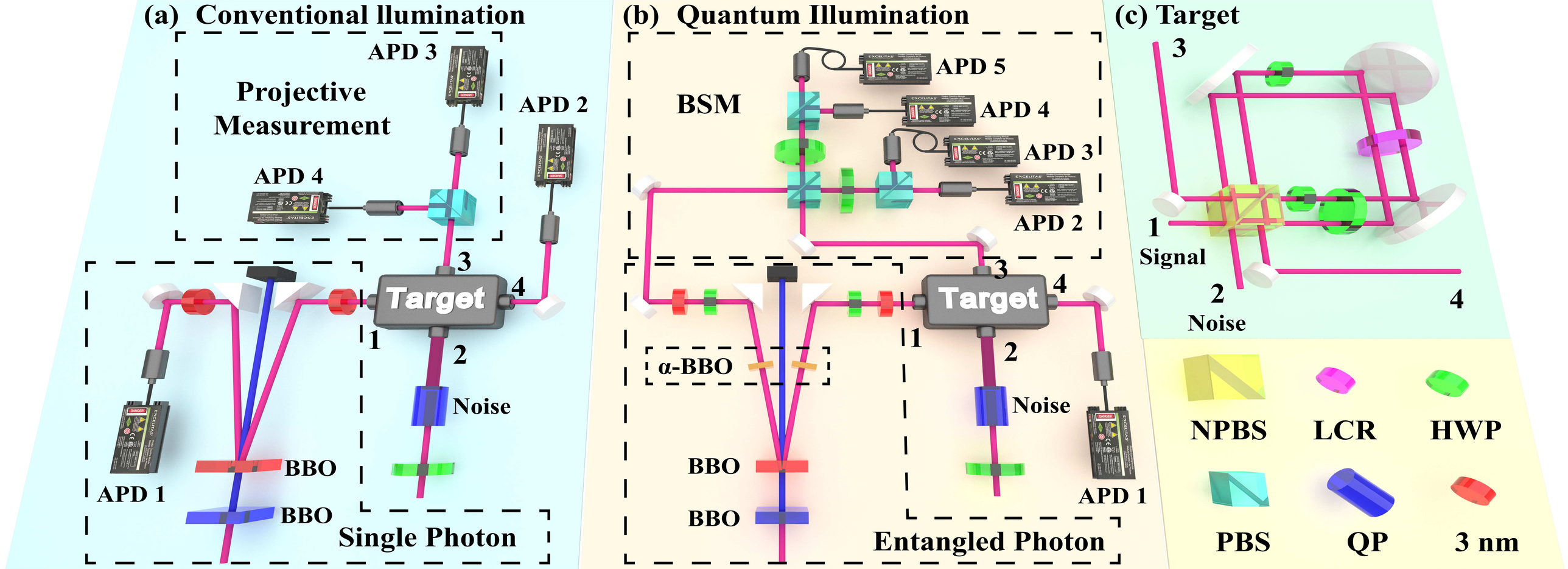
(a) Conventional Ilumination
Projective Measurement
APD 3
APD 2
APD 4
Target
3
4
1
2
Noise
APD 1
BBO
BBO
Single Photon
(b) Quantum Illumination
BSM
APD 5
APD 4
APD 3
APD 2
Target
3
4
1
2
α-BBO
Noise
BBO
BBO
APD 1
Entangled Photon
(c) Target
3
1
Signal
2
Noise
4
NPBS
LCR
HWP
PBS
QP
3 nm