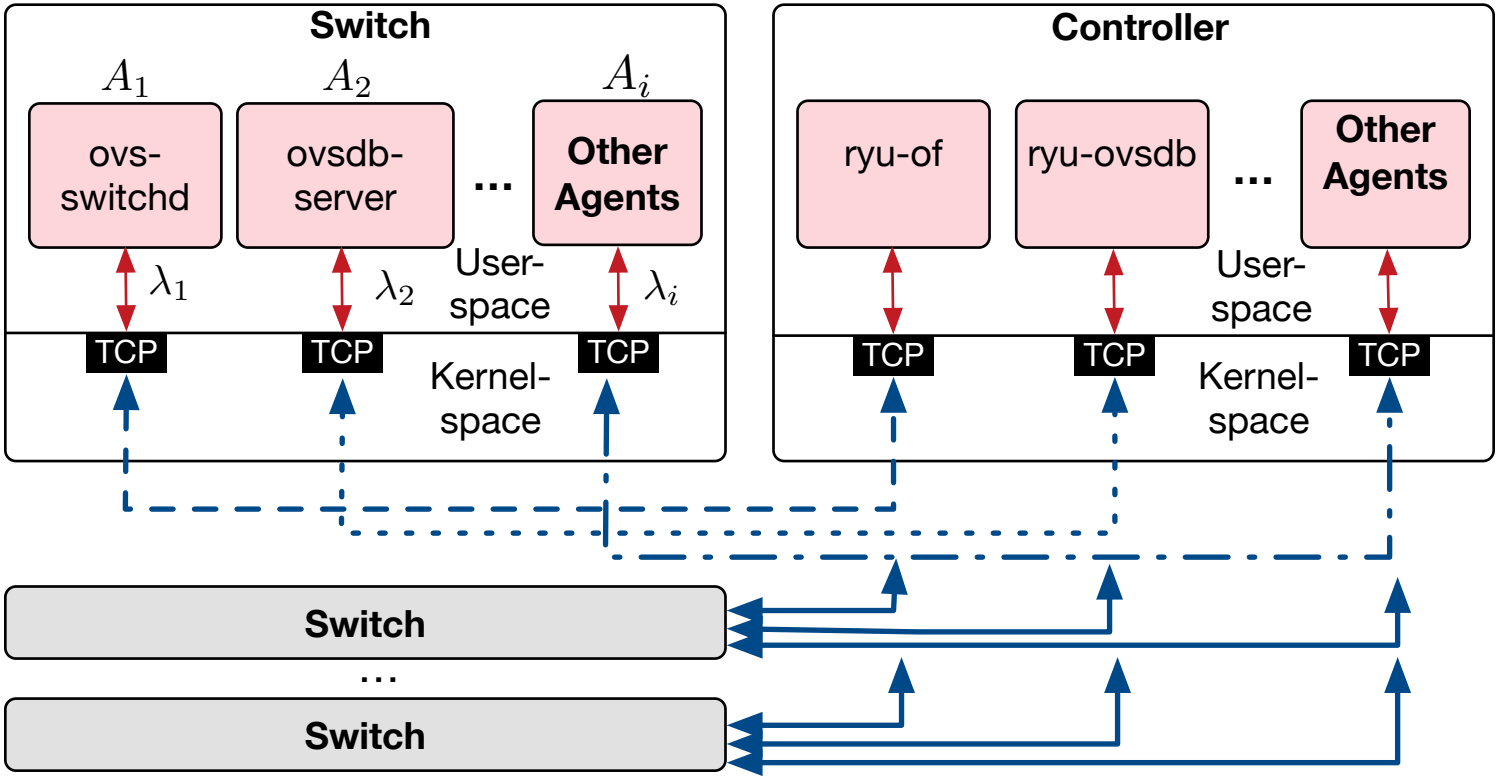
Switch
A_1
A_2
A_i
ovs-switchd
ovsdb-server
...
Other Agents
λ_1
λ_2
λ_i
User-space
TCP
TCP
TCP
Kernel-space
Controller
ryu-of
ryu-ovsdb
...
Other Agents
User-space
TCP
TCP
TCP
Kernel-space
Switch
...
Switch