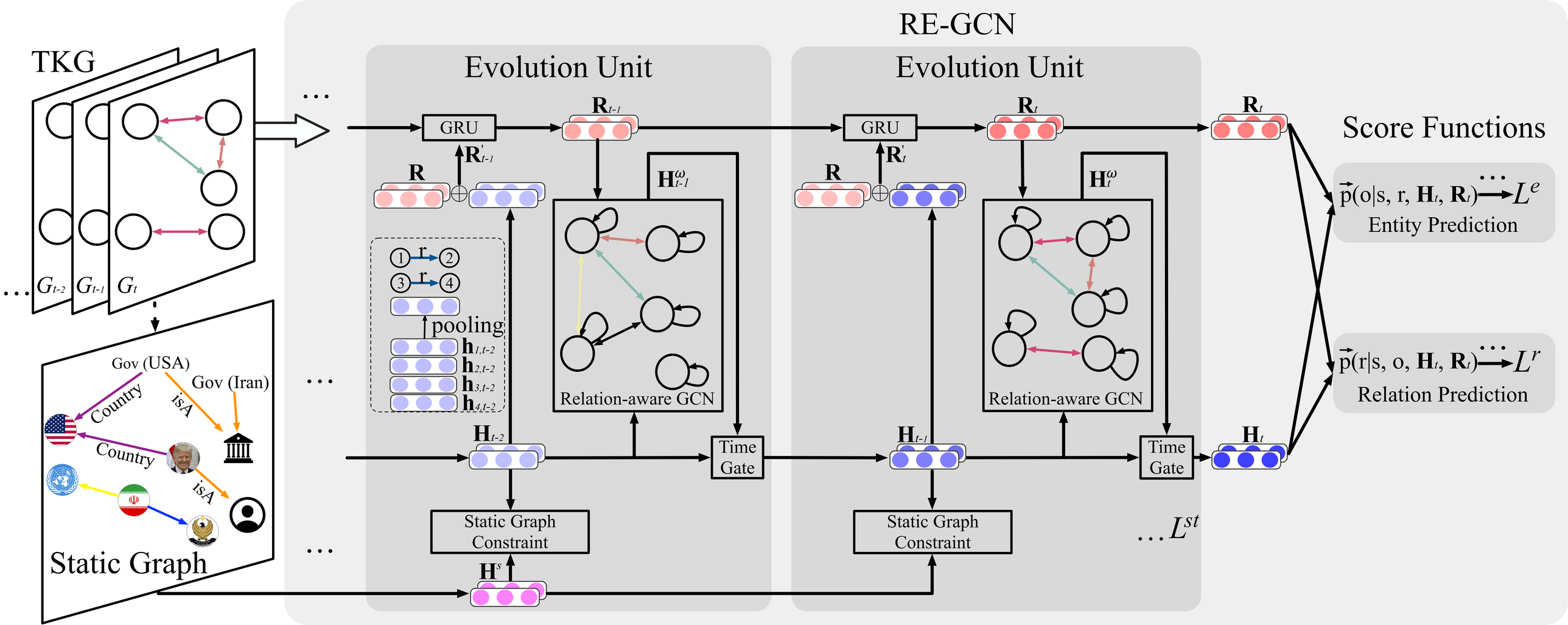
RE-GCN
TKG
Evolution Unit
Evolution Unit
GRU
GRU
Relation-aware GCN
Relation-aware GCN
pooling
Time Gate
Time Gate
Static Graph Constraint
Static Graph Constraint
Static Graph
Gov (USA)
Gov (Iran)
Country
isA
Country
isA
Score Functions
Entity Prediction
Relation Prediction