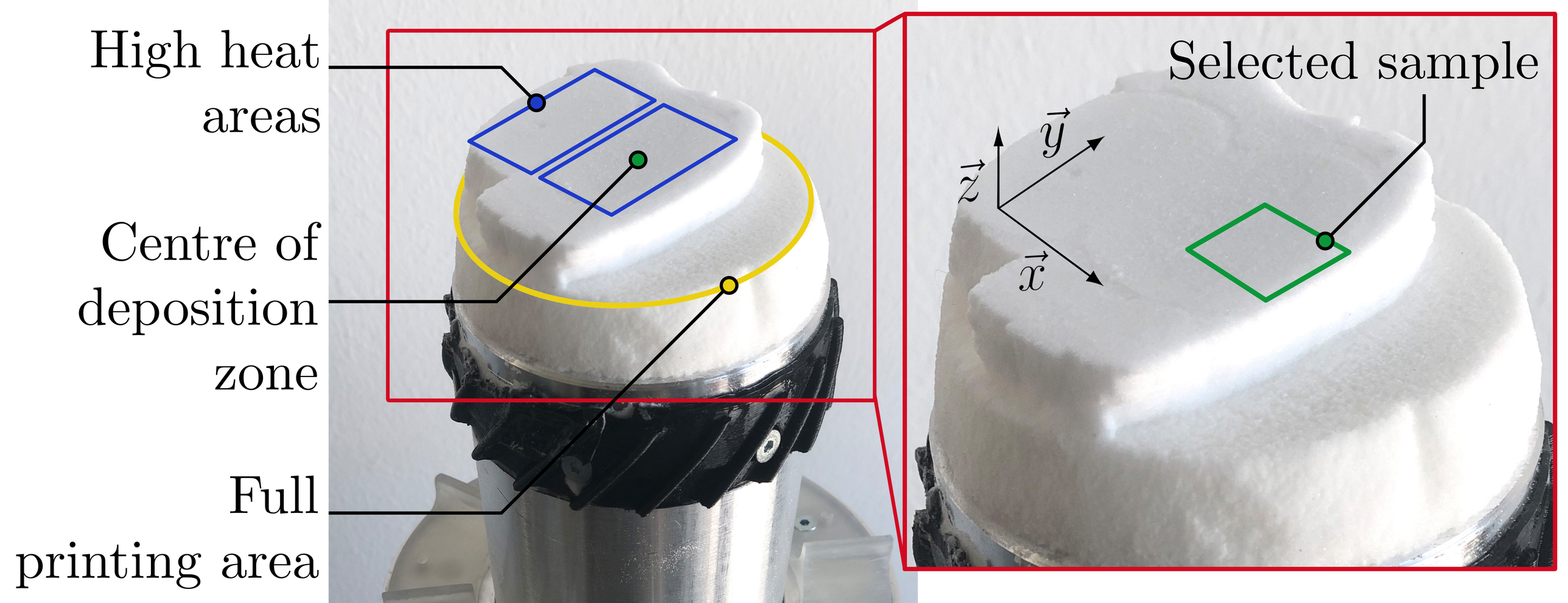
High heat areas
Centre of deposition zone
Full printing area
Selected sample
$\vec{y}$
$\vec{z}$
$\vec{x}$

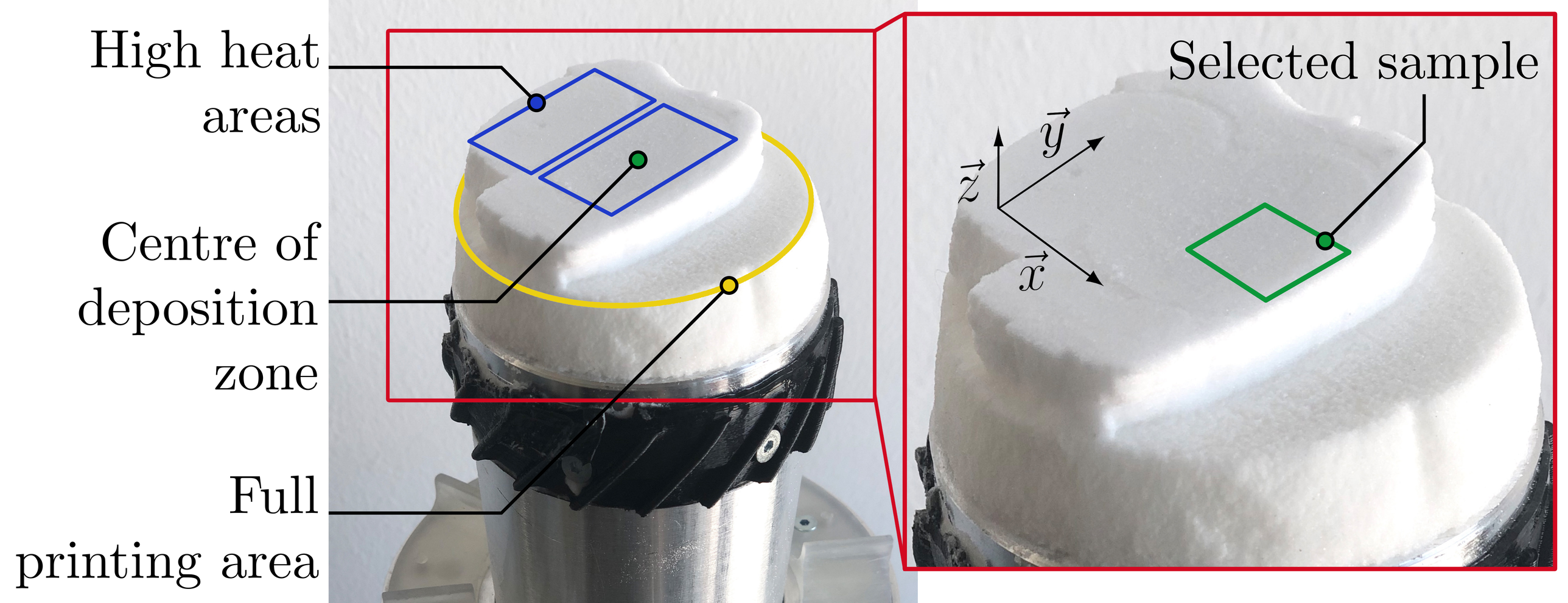
High heat areas
Centre of deposition zone
Full printing area
Selected sample
$\vec{y}$
$\vec{z}$
$\vec{x}$