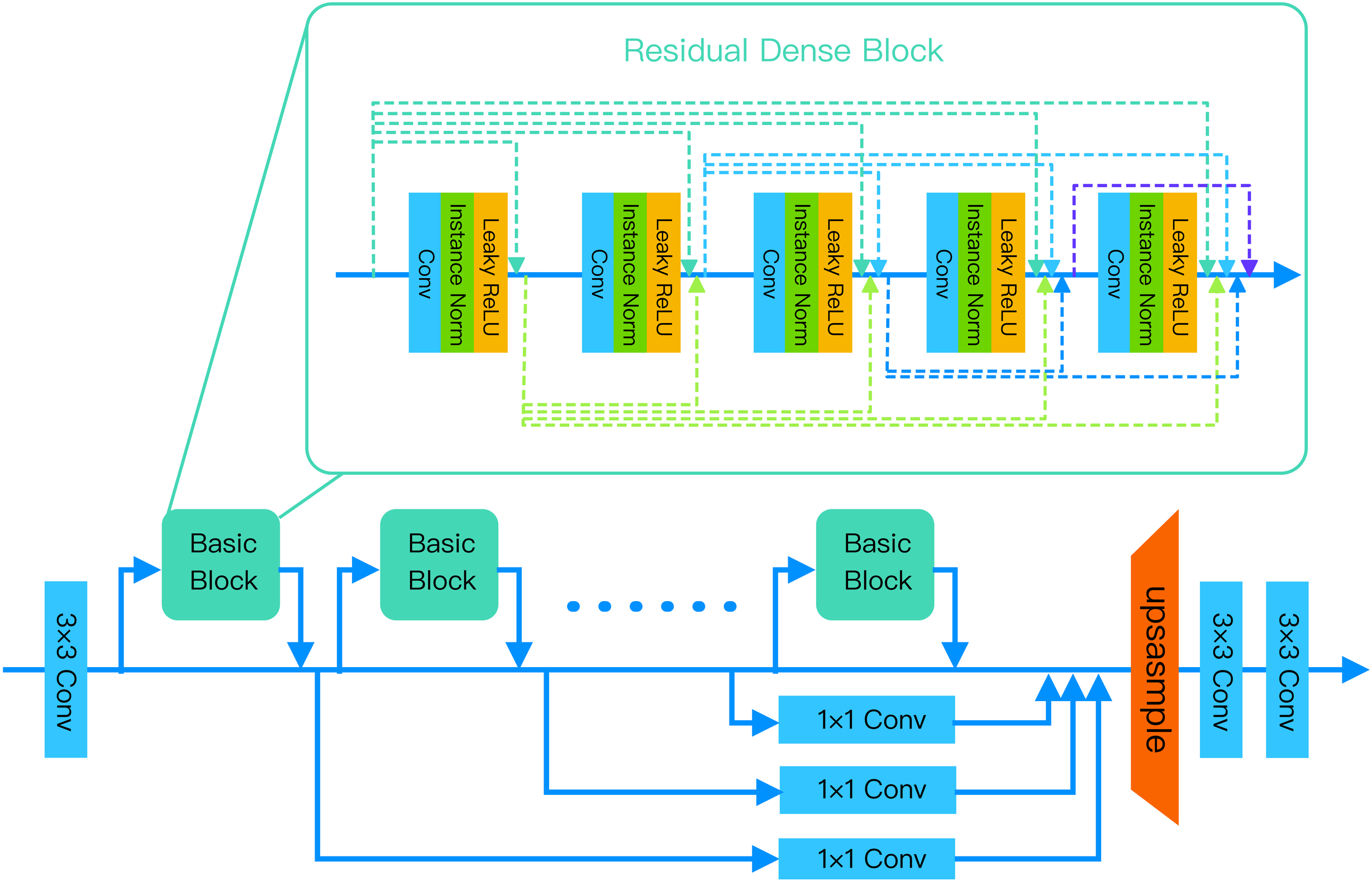
Residual Dense Block
Conv
Instance Norm
Leaky ReLU
Conv
Instance Norm
Leaky ReLU
Conv
Instance Norm
Leaky ReLU
Conv
Instance Norm
Leaky ReLU
Conv
Instance Norm
Leaky ReLU
3x3 Conv
Basic Block
Basic Block
Basic Block
1x1 Conv
1x1 Conv
1x1 Conv
upsample
3x3 Conv
3x3 Conv