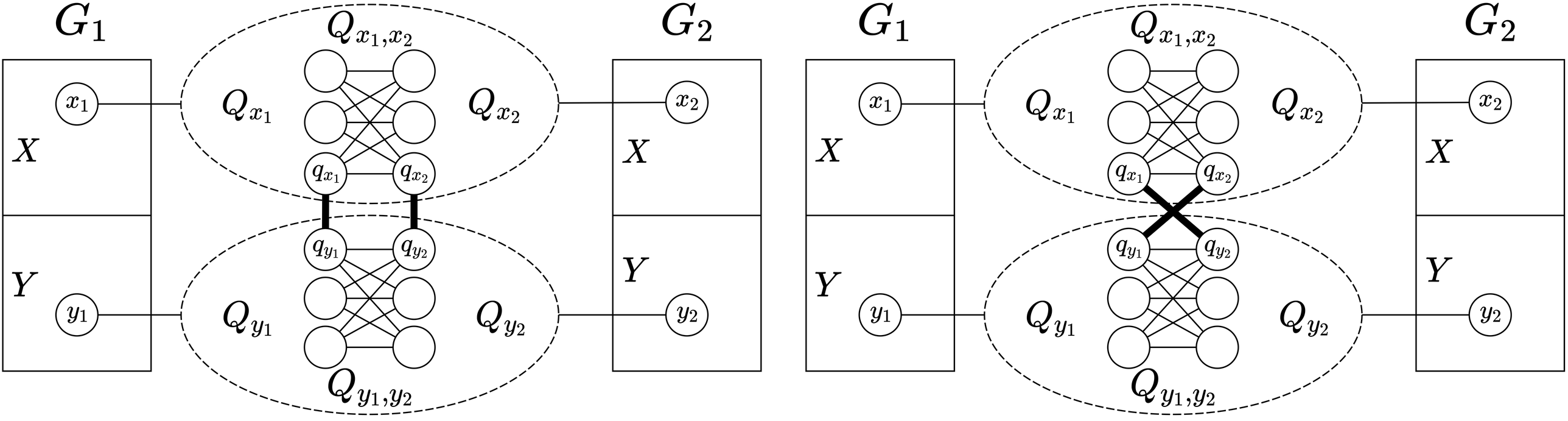
G_1
G_2
Q_{x_1,x_2}
Q_{x_1}
Q_{x_2}
x_1
x_2
X
X
q_{x_1}
q_{x_2}
q_{y_1}
q_{y_2}
Y
Y
y_1
y_2
Q_{y_1}
Q_{y_2}
Q_{y_1,y_2}
G_1
G_2
Q_{x_1,x_2}
Q_{x_1}
Q_{x_2}
x_1
x_2
X
X
q_{x_1}
q_{x_2}
q_{y_1}
q_{y_2}
Y
Y
y_1
y_2
Q_{y_1}
Q_{y_2}
Q_{y_1,y_2}