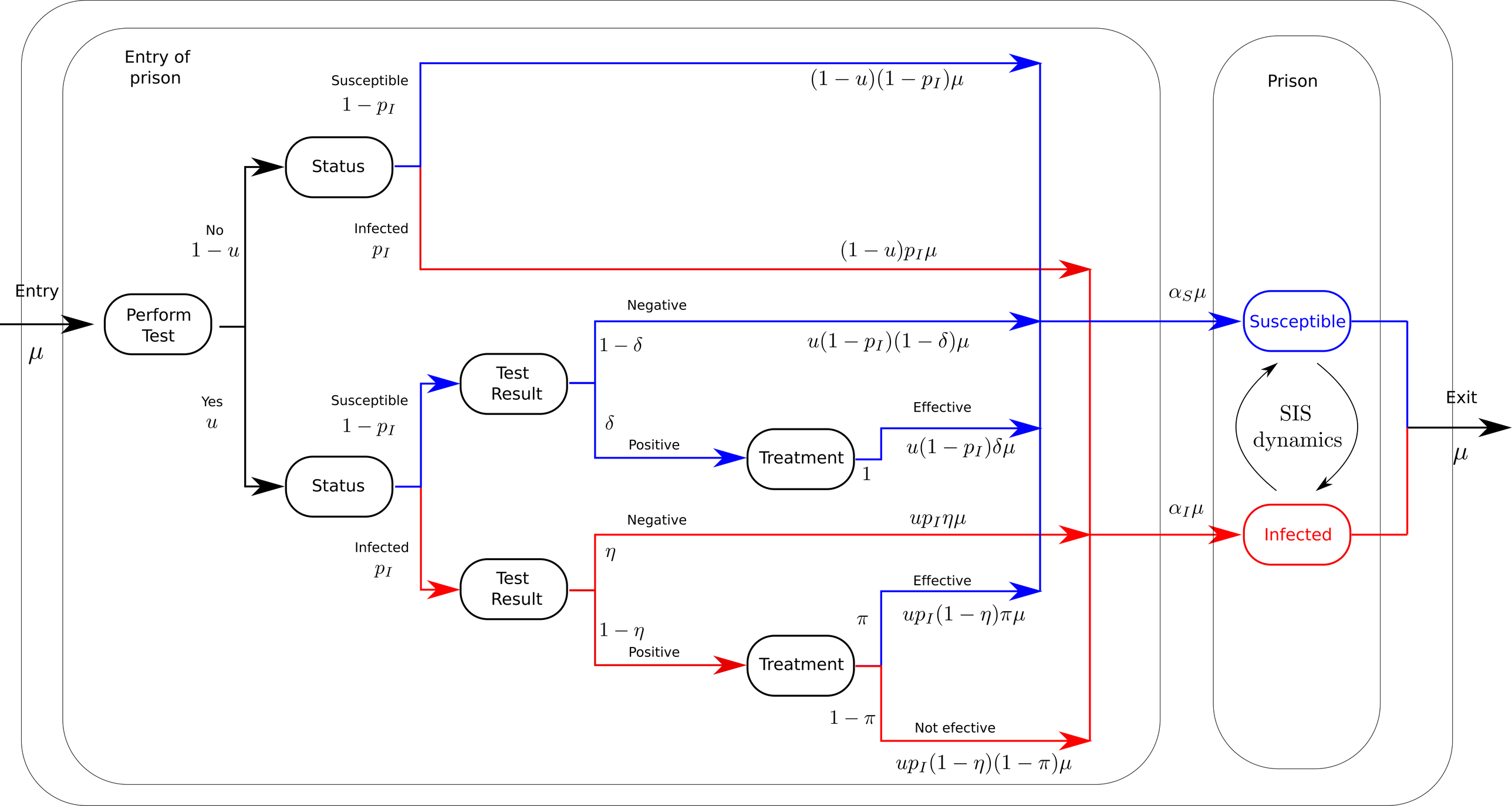
Entry of prison
Prison
Entry
μ
Perform Test
No
$1-u$
Yes
u
Status
Status
Susceptible
$1-p_I$
Infected
p_I
Susceptible
$1-p_I$
Infected
p_I
$(1-u)(1-p_I)\mu$
$(1-u)p_I\mu$
Test Result
Test Result
Negative
$1-\delta$
$u(1-p_I)(1-\delta)\mu$
δ
Positive
Treatment
Effective
1
$u(1-p_I)\delta\mu$
Negative
η
$up_I\eta\mu$
$1-\eta$
Positive
Treatment
Effective
π
$up_I(1-\eta)\pi\mu$
$1-\pi$
Not efective
$up_I(1-\eta)(1-\pi)\mu$
$\alpha_S\mu$
$\alpha_I\mu$
Susceptible
Infected
SIS dynamics
Exit
μ