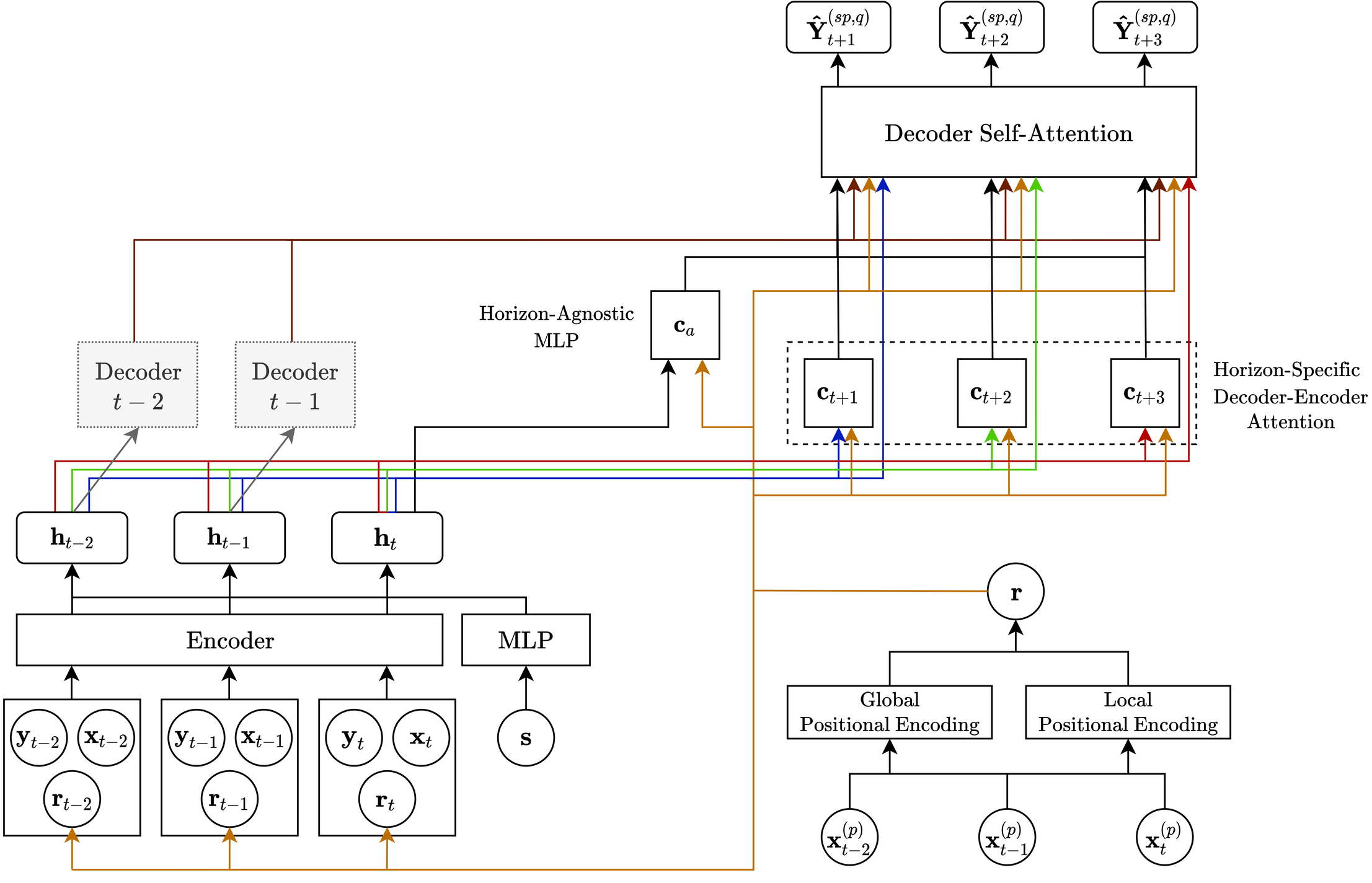
$\hat{\mathbf{Y}}^{(sp,q)}_{t+1}$
$\hat{\mathbf{Y}}^{(sp,q)}_{t+2}$
$\hat{\mathbf{Y}}^{(sp,q)}_{t+3}$
Decoder Self-Attention
Horizon-Agnostic MLP
$\mathbf{c}_a$
Decoder $t-2$
Decoder $t-1$
$\mathbf{c}_{t+1}$
$\mathbf{c}_{t+2}$
$\mathbf{c}_{t+3}$
Horizon-Specific Decoder-Encoder Attention
$\mathbf{h}_{t-2}$
$\mathbf{h}_{t-1}$
$\mathbf{h}_t$
$\mathbf{r}$
Encoder
MLP
Global Positional Encoding
Local Positional Encoding
$\mathbf{y}_{t-2}$ $\mathbf{x}_{t-2}$ $\mathbf{r}_{t-2}$
$\mathbf{y}_{t-1}$ $\mathbf{x}_{t-1}$ $\mathbf{r}_{t-1}$
$\mathbf{y}_t$ $\mathbf{x}_t$ $\mathbf{r}_t$
$\mathbf{s}$
$\mathbf{x}^{(p)}_{t-2}$
$\mathbf{x}^{(p)}_{t-1}$
$\mathbf{x}^{(p)}_t$