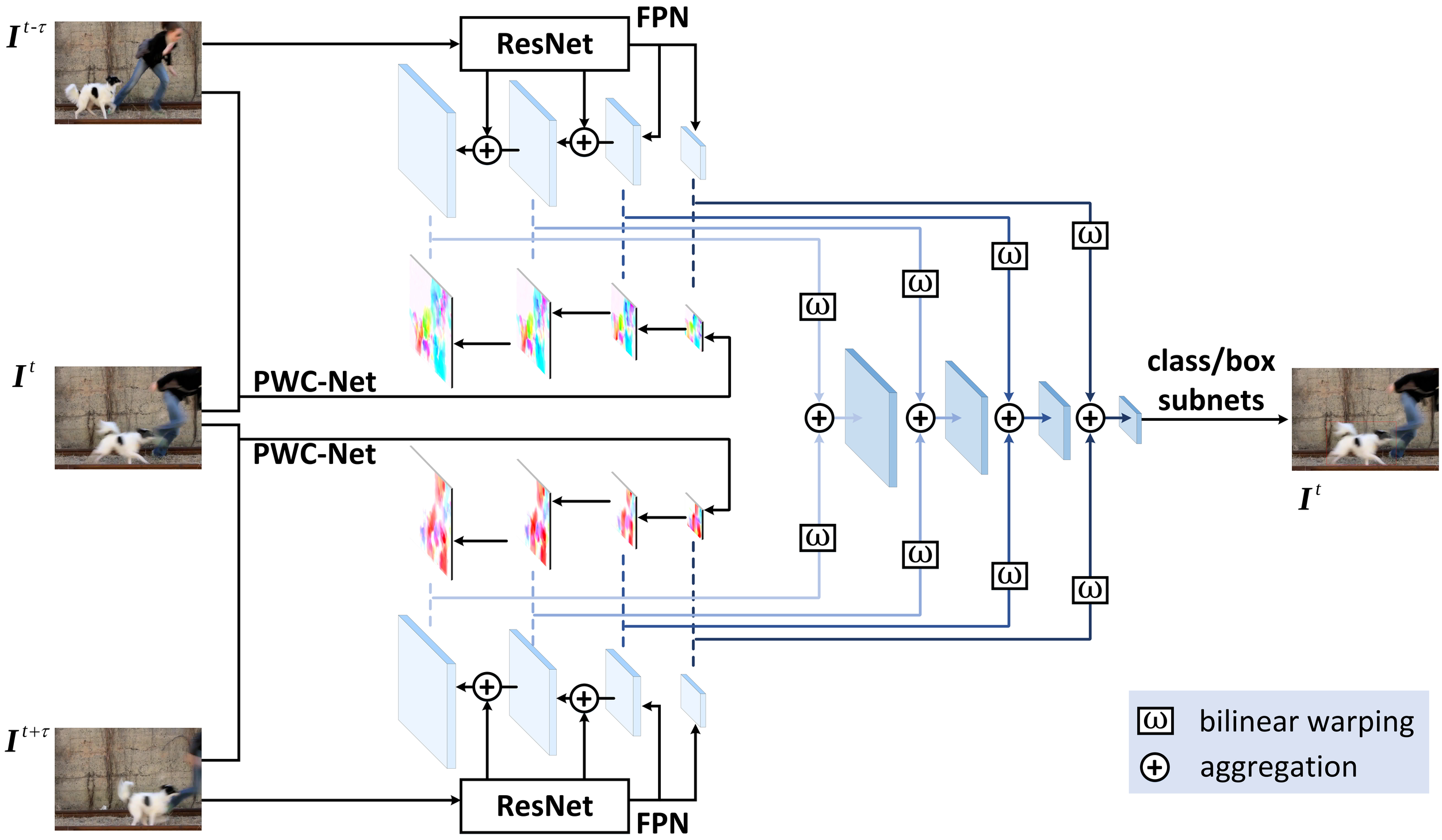
$I^{t-\tau}$
ResNet
FPN
I^{t}
PWC-Net
PWC-Net
$I^{t+\tau}$
ω
class/box
subnets
I^{t}
ResNet
FPN
ω bilinear warping
⊕ aggregation