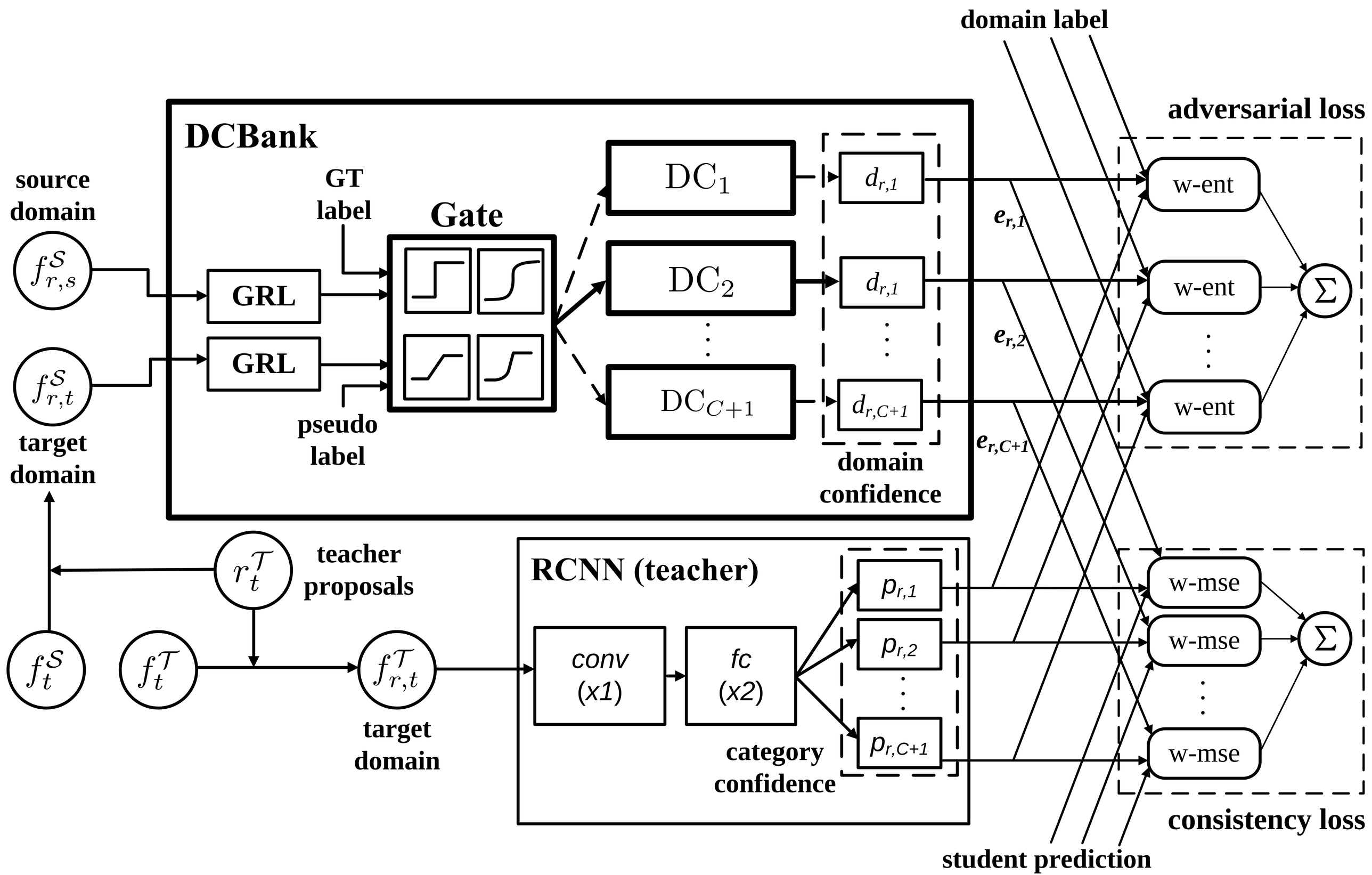
domain label
adversarial loss
DCBank
source domain
GT label
Gate
GRL
GRL
pseudo label
target domain
DC1
DC2
DCC+1
dr,1
dr,1
dr,C+1
domain confidence
er,1
er,2
er,C+1
w-ent
w-ent
w-ent
Σ
teacher proposals
target domain
RCNN (teacher)
conv (x1)
fc (x2)
pr,1
pr,2
pr,C+1
category confidence
w-mse
w-mse
w-mse
Σ
consistency loss
student prediction