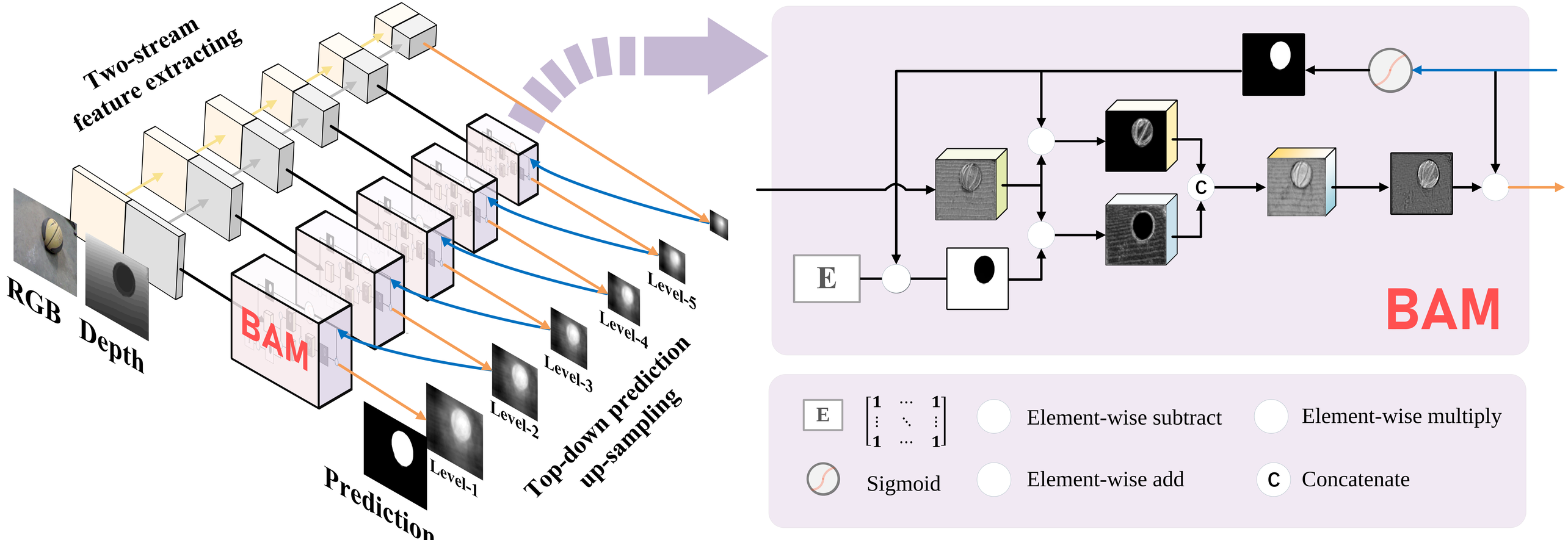
Two-stream feature extracting
RGB
Depth
BAM
Level-1
Level-2
Level-3
Level-4
Level-5
Prediction
Top-down prediction up-sampling
E
C
BAM
E
Element-wise subtract
Element-wise multiply
Sigmoid
Element-wise add
C
Concatenate