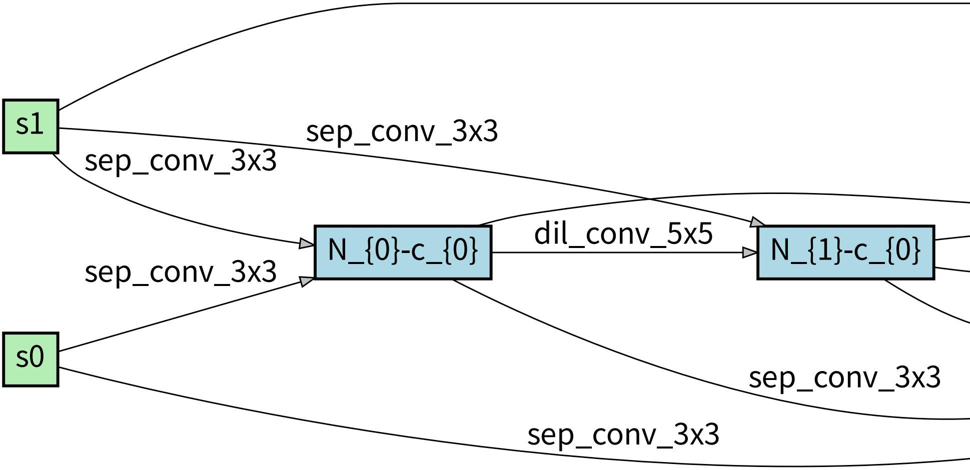
s1
sep_conv_3x3
sep_conv_3x3
N_{0}-c_{0}
dil_conv_5x5
N_{1}-c_{0}
sep_conv_3x3
s0
sep_conv_3x3
sep_conv_3x3

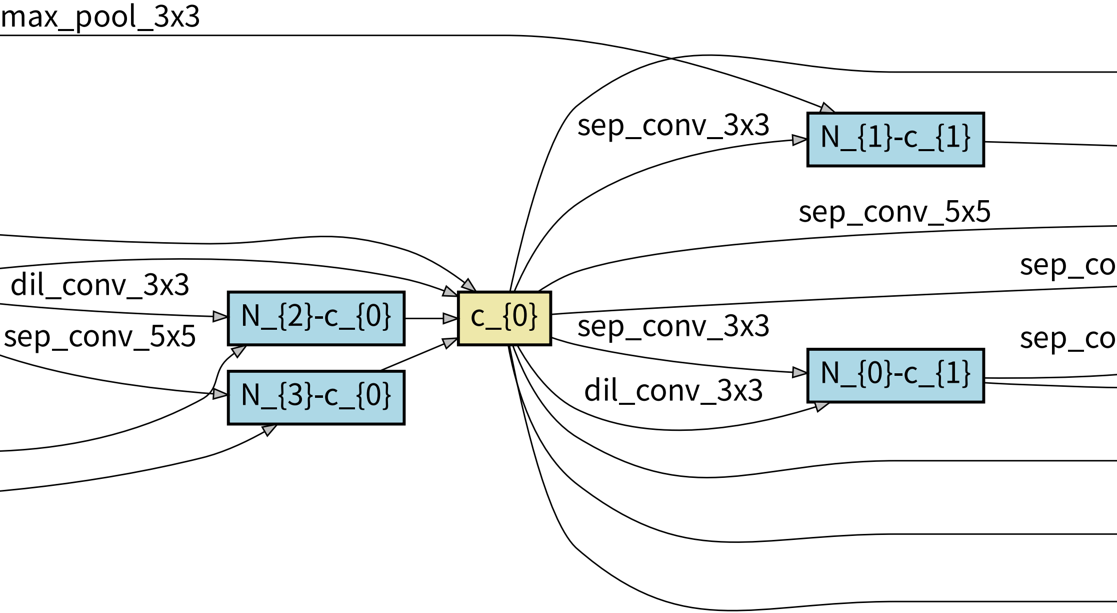
max_pool_3x3
sep_conv_3x3
N_{1}-c_{1}
sep_conv_5x5
sep_co
dil_conv_3x3
N_{2}-c_{0}
c_{0}
sep_conv_5x5
sep_conv_3x3
sep_co
N_{3}-c_{0}
N_{0}-c_{1}
dil_conv_3x3

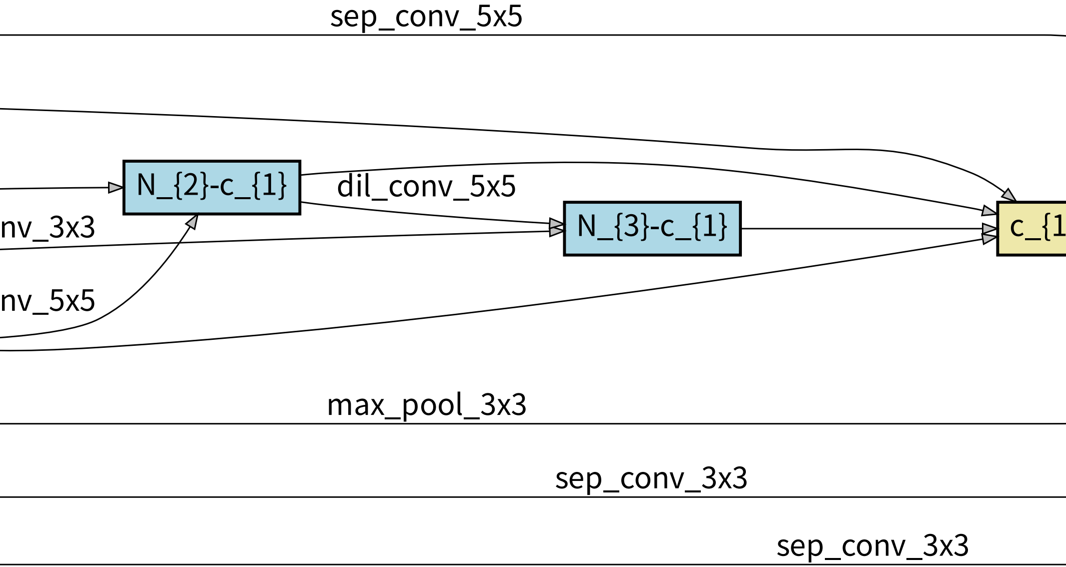
sep_conv_5x5
N_{2}-c_{1}
dil_conv_5x5
N_{3}-c_{1}
c_{1
nv_3x3
nv_5x5
max_pool_3x3
sep_conv_3x3
sep_conv_3x3

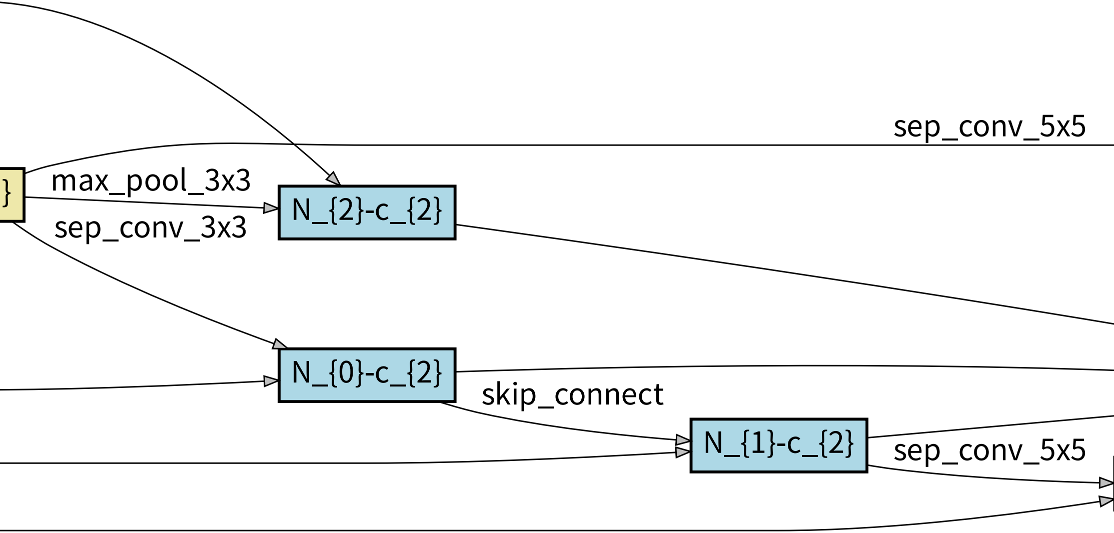
}
sep_conv_5x5
max_pool_3x3
N_{2}-c_{2}
sep_conv_3x3
N_{0}-c_{2}
skip_connect
N_{1}-c_{2}
sep_conv_5x5

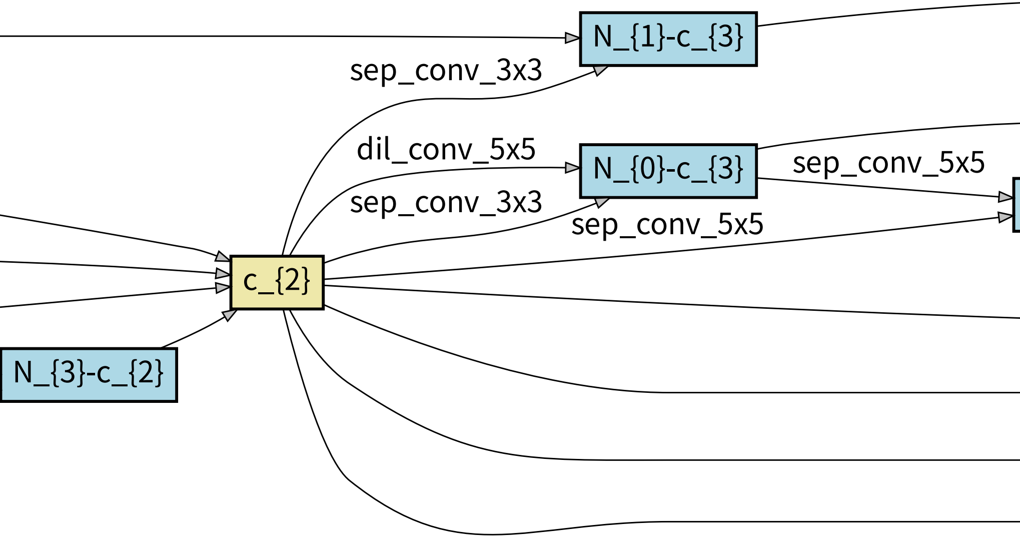
N_{1}-c_{3}
sep_conv_3x3
dil_conv_5x5
N_{0}-c_{3}
sep_conv_5x5
sep_conv_3x3
sep_conv_5x5
c_{2}
N_{3}-c_{2}

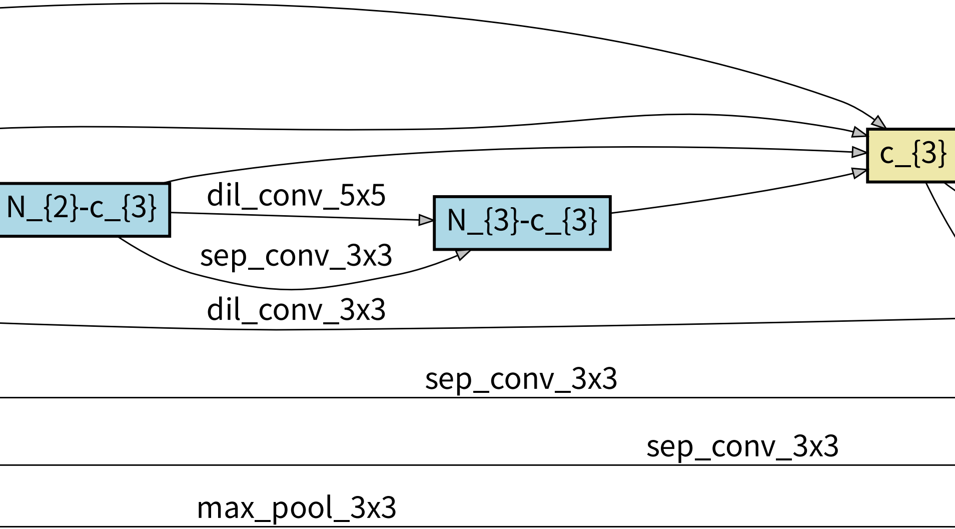
N_{2}-c_{3}
dil_conv_5x5
N_{3}-c_{3}
sep_conv_3x3
c_{3}
dil_conv_3x3
sep_conv_3x3
sep_conv_3x3
max_pool_3x3

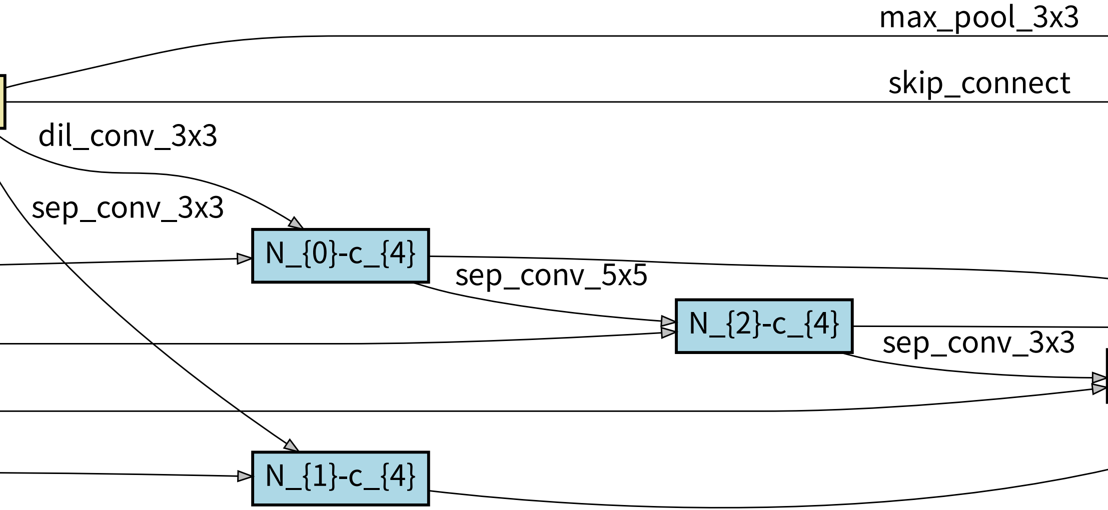
max_pool_3x3
skip_connect
dil_conv_3x3
sep_conv_3x3
N_{0}-c_{4}
sep_conv_5x5
N_{2}-c_{4}
sep_conv_3x3
N_{1}-c_{4}

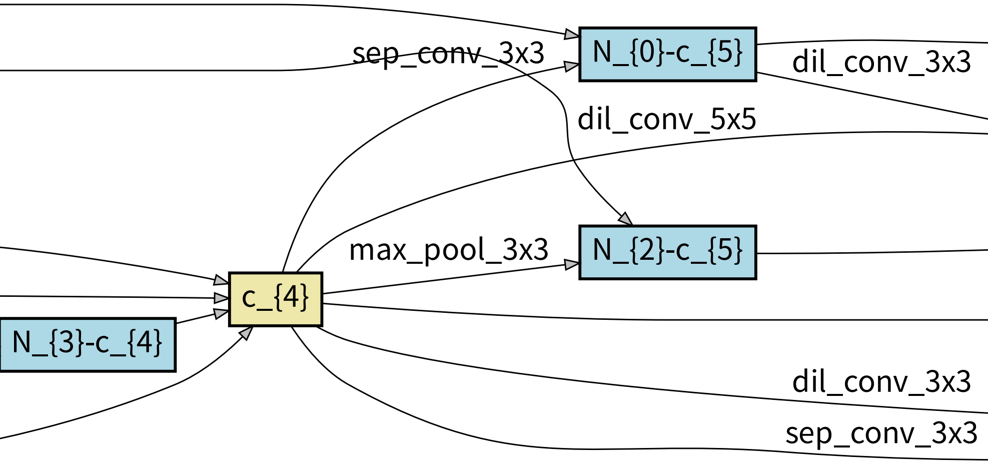
N_{0}-c_{5}
sep_conv_3x3
dil_conv_3x3
dil_conv_5x5
N_{2}-c_{5}
max_pool_3x3
c_{4}
N_{3}-c_{4}
dil_conv_3x3
sep_conv_3x3

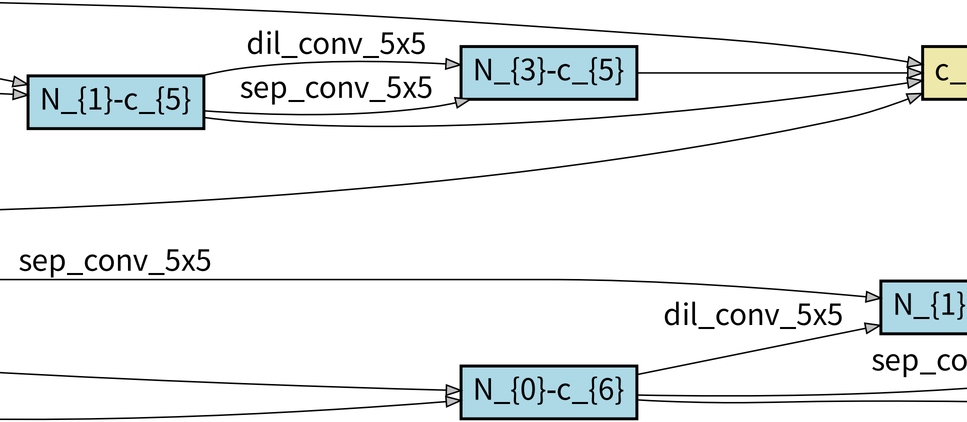
dil_conv_5x5
N_{3}-c_{5}
c_
N_{1}-c_{5}
sep_conv_5x5
sep_conv_5x5
N_{1}
dil_conv_5x5
sep_co
N_{0}-c_{6}

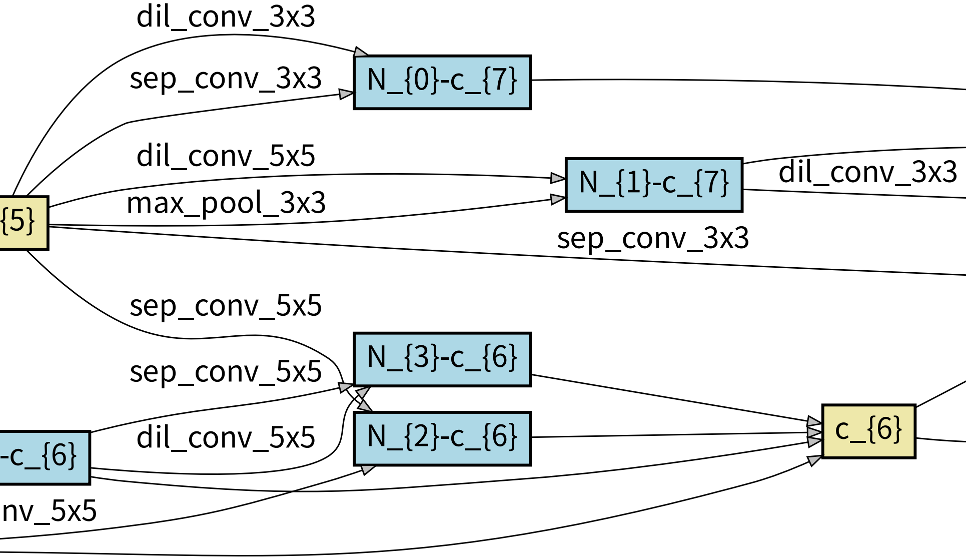

dil_conv_3x3
sep_conv_3x3
N_{0}-c_{7}
dil_conv_5x5
N_{1}-c_{7}
dil_conv_3x3
{5}
max_pool_3x3
sep_conv_3x3
sep_conv_5x5
N_{3}-c_{6}
sep_conv_5x5
-c_{6}
dil_conv_5x5
N_{2}-c_{6}
c_{6}
nv_5x5

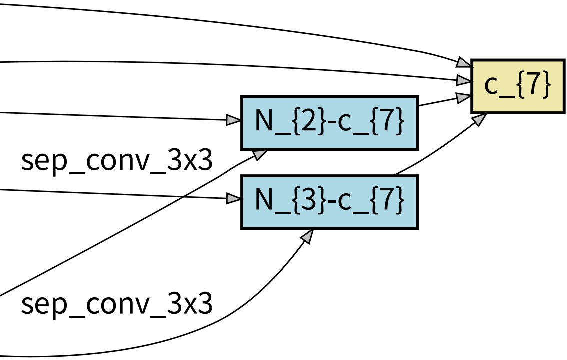
c_{7}
N_{2}-c_{7}
N_{3}-c_{7}
sep_conv_3x3
sep_conv_3x3