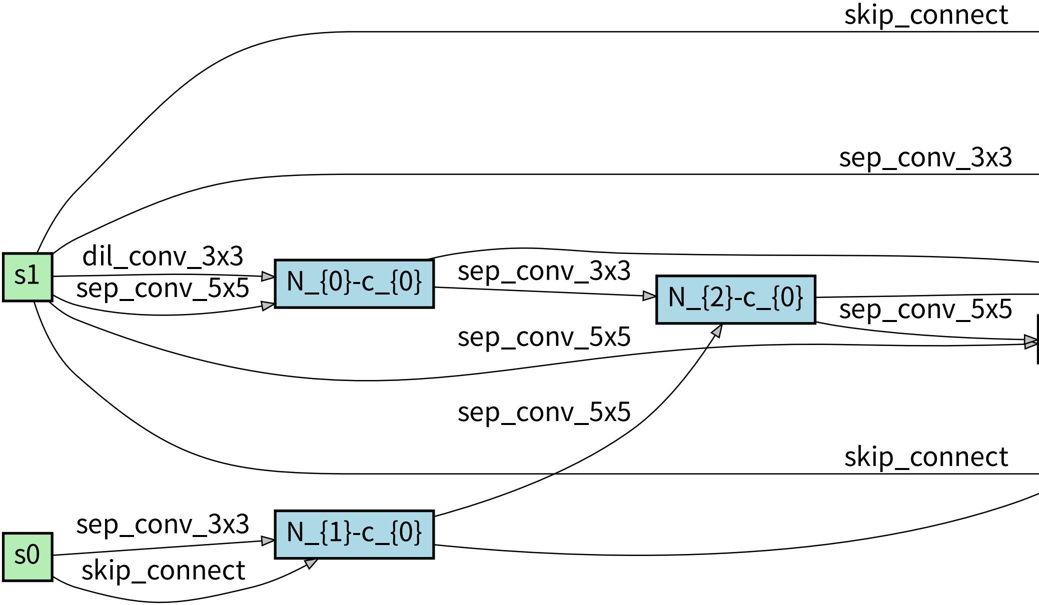
skip_connect
sep_conv_3x3
s1
dil_conv_3x3
sep_conv_5x5
N_{0}-c_{0}
sep_conv_3x3
N_{2}-c_{0}
sep_conv_5x5
sep_conv_5x5
sep_conv_5x5
skip_connect
sep_conv_3x3
s0
N_{1}-c_{0}
skip_connect

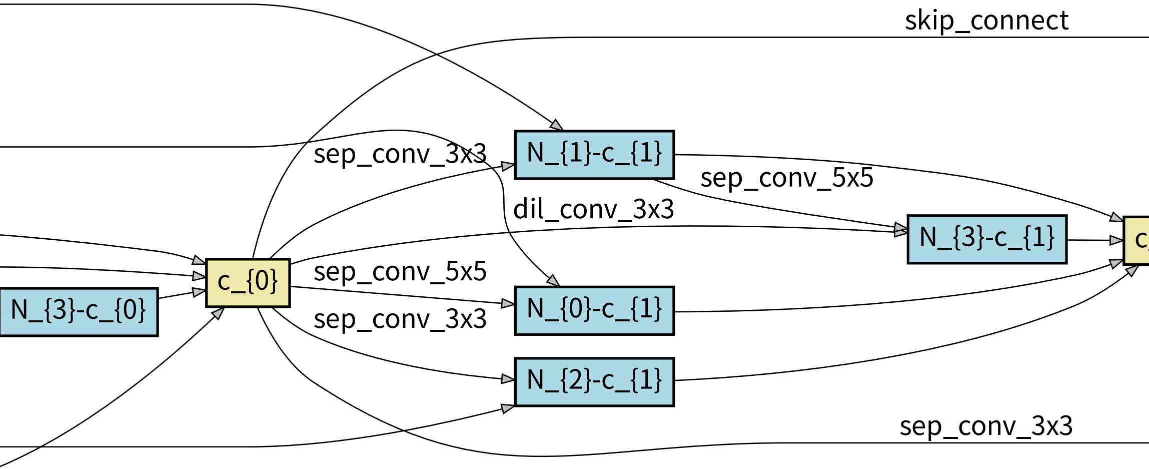
skip_connect
sep_conv_3x3
N_{1}-c_{1}
sep_conv_5x5
dil_conv_3x3
N_{3}-c_{1}
c_{0}
sep_conv_5x5
N_{3}-c_{0}
N_{0}-c_{1}
sep_conv_3x3
N_{2}-c_{1}
sep_conv_3x3
c

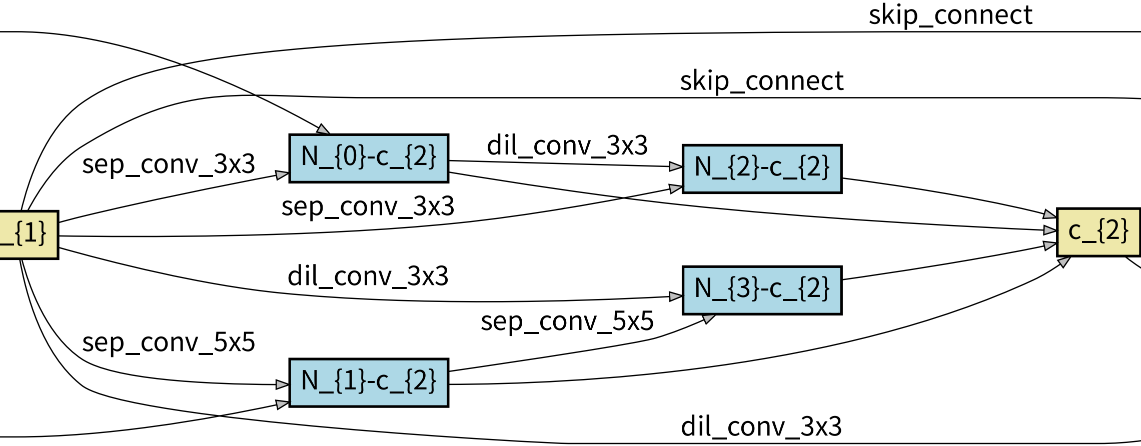
skip_connect
skip_connect
sep_conv_3x3
N_{0}-c_{2}
dil_conv_3x3
N_{2}-c_{2}
sep_conv_3x3
_{1}
c_{2}
dil_conv_3x3
N_{3}-c_{2}
sep_conv_5x5
sep_conv_5x5
N_{1}-c_{2}
dil_conv_3x3

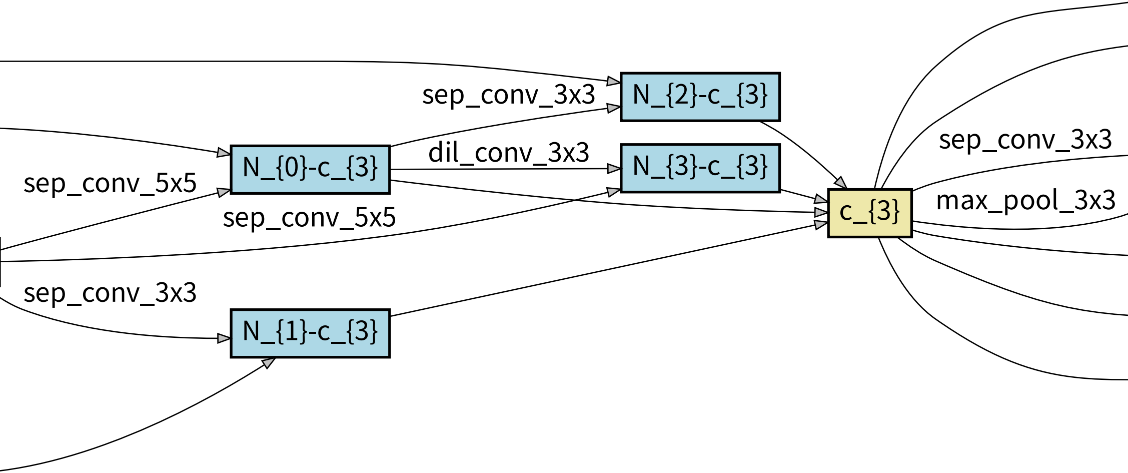
N_{2}-c_{3}
sep_conv_3x3
N_{0}-c_{3}
dil_conv_3x3
N_{3}-c_{3}
sep_conv_5x5
sep_conv_5x5
c_{3}
sep_conv_3x3
max_pool_3x3
sep_conv_3x3
N_{1}-c_{3}

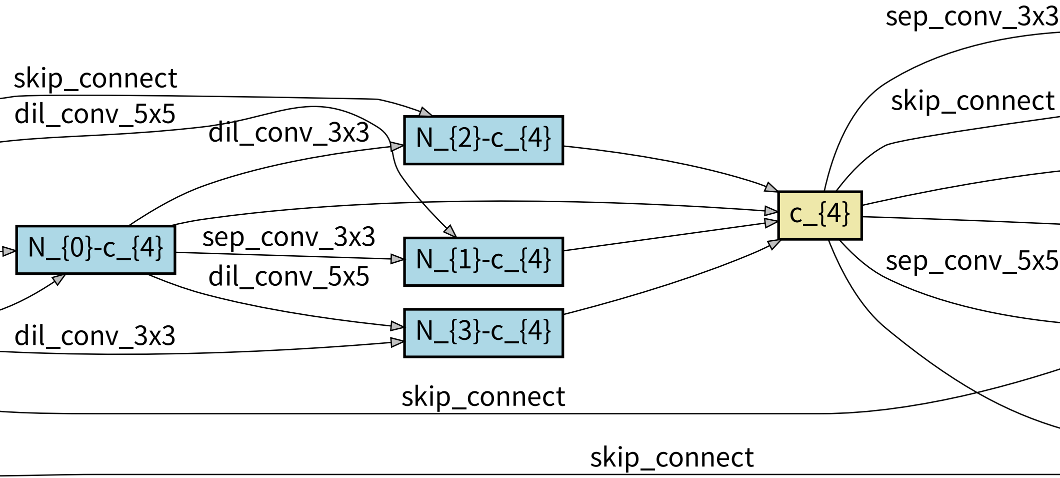
sep_conv_3x3
skip_connect
skip_connect
dil_conv_5x5
dil_conv_3x3
N_{2}-c_{4}
c_{4}
N_{0}-c_{4}
sep_conv_3x3
N_{1}-c_{4}
sep_conv_5x5
dil_conv_5x5
N_{3}-c_{4}
dil_conv_3x3
skip_connect
skip_connect

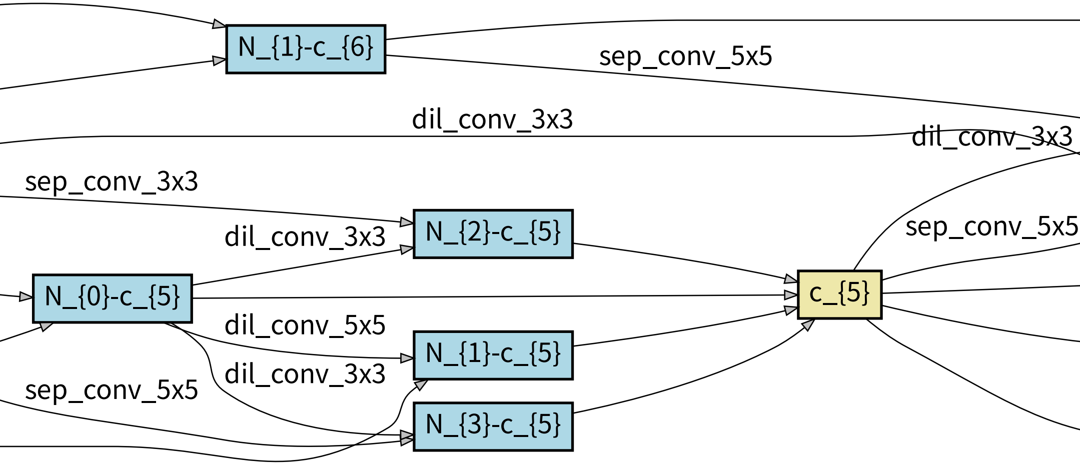
N_{1}-c_{6}
sep_conv_5x5
dil_conv_3x3
dil_conv_3x3
sep_conv_3x3
N_{2}-c_{5}
dil_conv_3x3
sep_conv_5x5
N_{0}-c_{5}
c_{5}
dil_conv_5x5
N_{1}-c_{5}
dil_conv_3x3
sep_conv_5x5
N_{3}-c_{5}

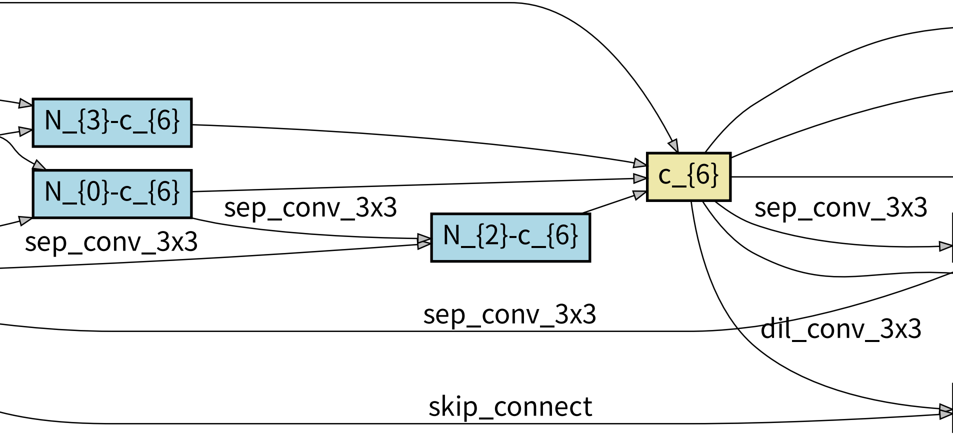
N_{3}-c_{6}
N_{0}-c_{6}
sep_conv_3x3
sep_conv_3x3
N_{2}-c_{6}
c_{6}
sep_conv_3x3
sep_conv_3x3
dil_conv_3x3
skip_connect

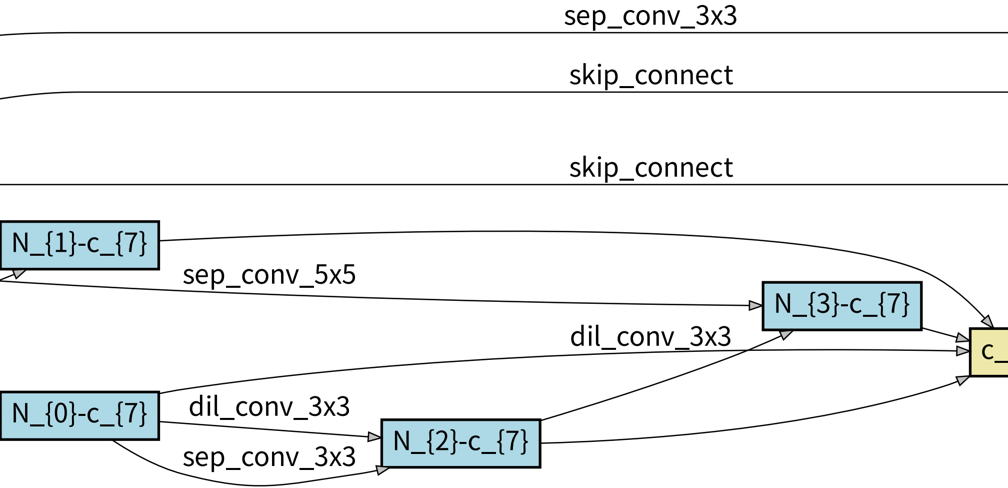
sep_conv_3x3
skip_connect
skip_connect
N_{1}-c_{7}
sep_conv_5x5
N_{3}-c_{7}
dil_conv_3x3
c_
N_{0}-c_{7}
dil_conv_3x3
N_{2}-c_{7}
sep_conv_3x3

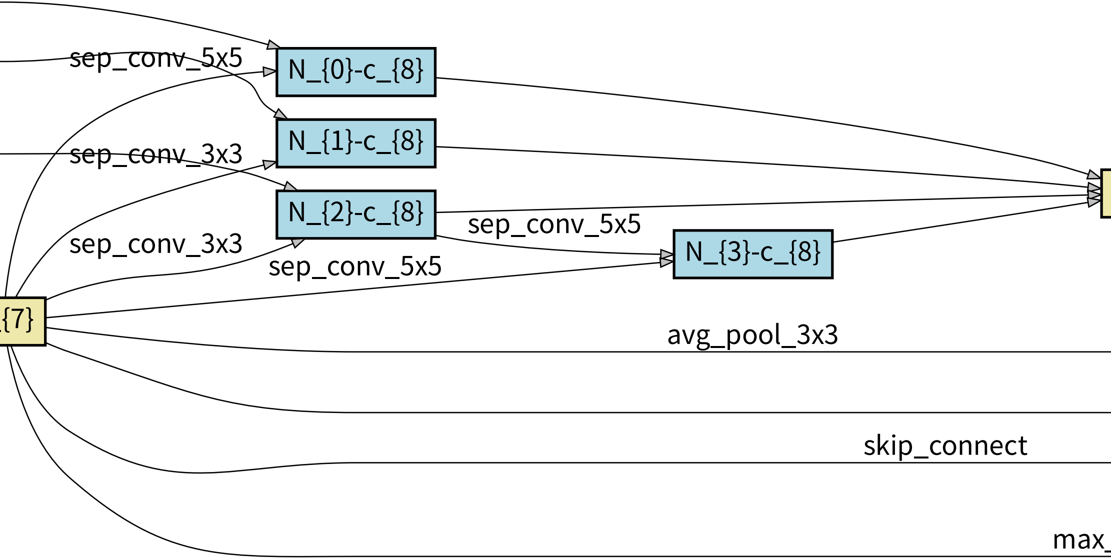
sep_conv_5x5
N_{0}-c_{8}
N_{1}-c_{8}
sep_conv_3x3
N_{2}-c_{8}
sep_conv_3x3
sep_conv_5x5
N_{3}-c_{8}
sep_conv_5x5
{7}
avg_pool_3x3
skip_connect
max_

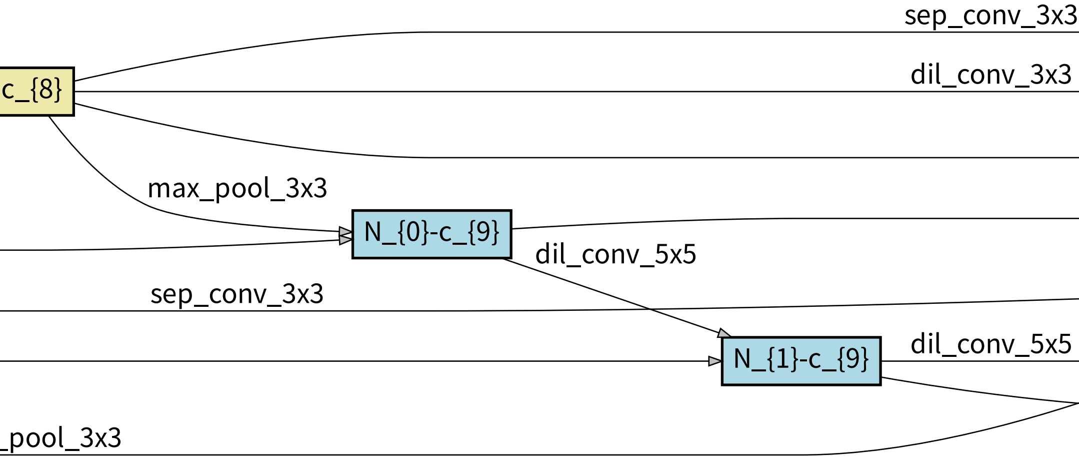
sep_conv_3x3
c_{8}
dil_conv_3x3
max_pool_3x3
N_{0}-c_{9}
dil_conv_5x5
sep_conv_3x3
N_{1}-c_{9}
dil_conv_5x5
_pool_3x3

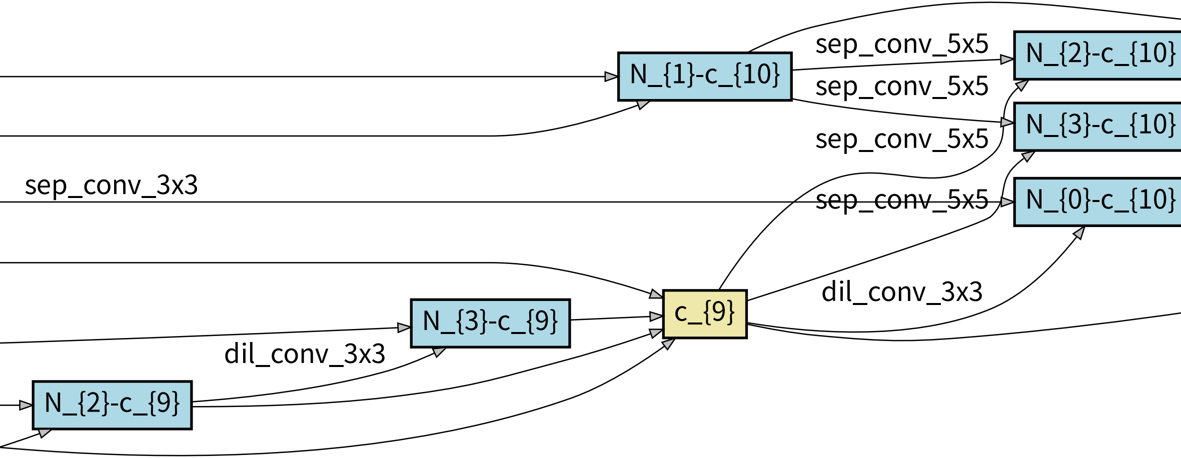
N_{1}-c_{10}
sep_conv_5x5
N_{2}-c_{10}
sep_conv_5x5
N_{3}-c_{10}
sep_conv_5x5
sep_conv_3x3
sep_conv_5x5
N_{0}-c_{10}
dil_conv_3x3
c_{9}
N_{3}-c_{9}
dil_conv_3x3
N_{2}-c_{9}

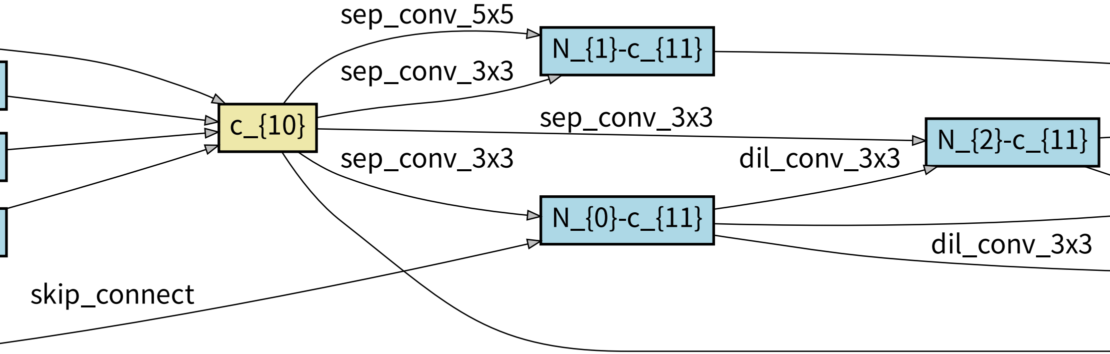
sep_conv_5x5
N_{1}-c_{11}
sep_conv_3x3
c_{10}
sep_conv_3x3
N_{2}-c_{11}
sep_conv_3x3
dil_conv_3x3
N_{0}-c_{11}
dil_conv_3x3
skip_connect

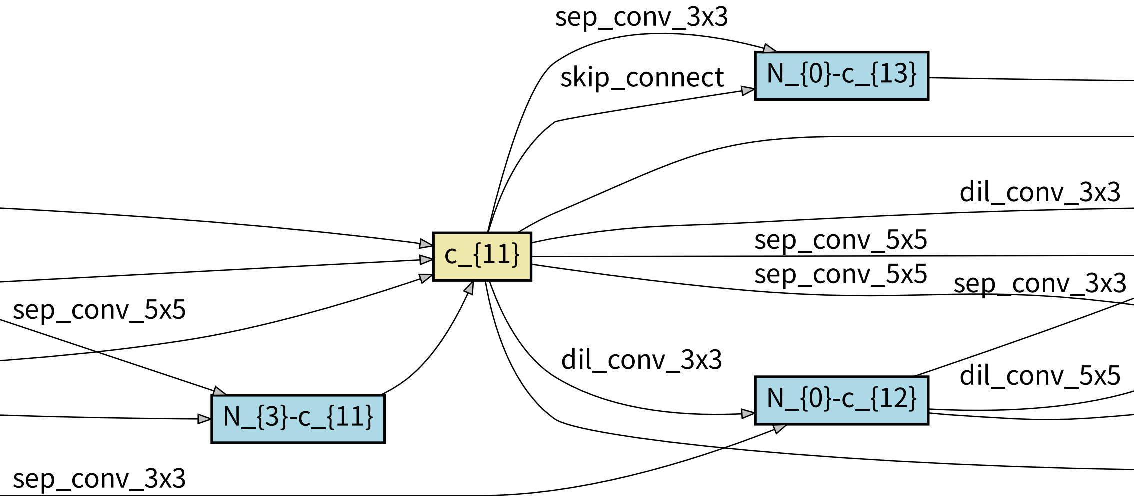
sep_conv_3x3
skip_connect
N_{0}-c_{13}
dil_conv_3x3
c_{11}
sep_conv_5x5
sep_conv_5x5
sep_conv_3x3
sep_conv_5x5
dil_conv_3x3
dil_conv_5x5
N_{0}-c_{12}
N_{3}-c_{11}
sep_conv_3x3

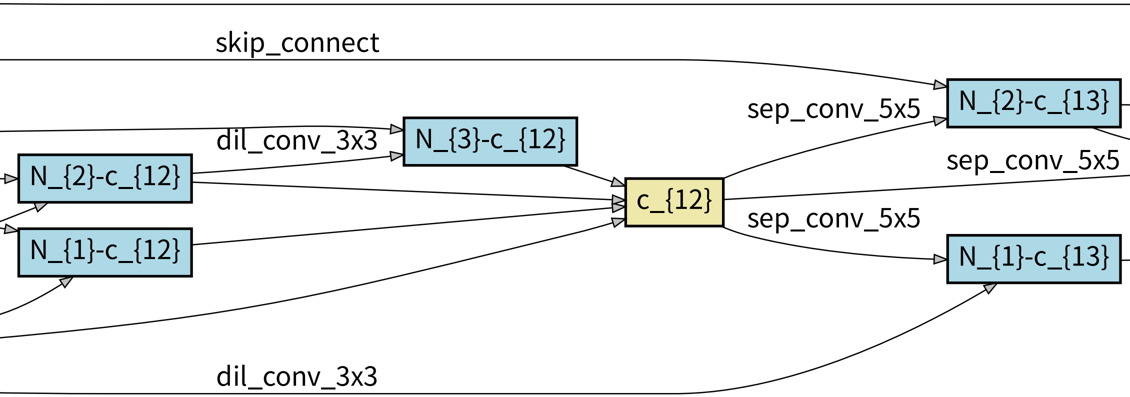
skip_connect
sep_conv_5x5
N_{2}-c_{13}
N_{3}-c_{12}
dil_conv_3x3
sep_conv_5x5
N_{2}-c_{12}
c_{12}
sep_conv_5x5
N_{1}-c_{12}
N_{1}-c_{13}
dil_conv_3x3

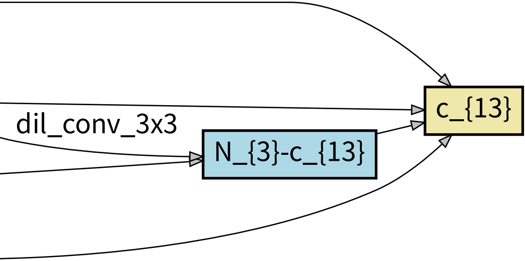
dil_conv_3x3
N_{3}-c_{13}
c_{13}