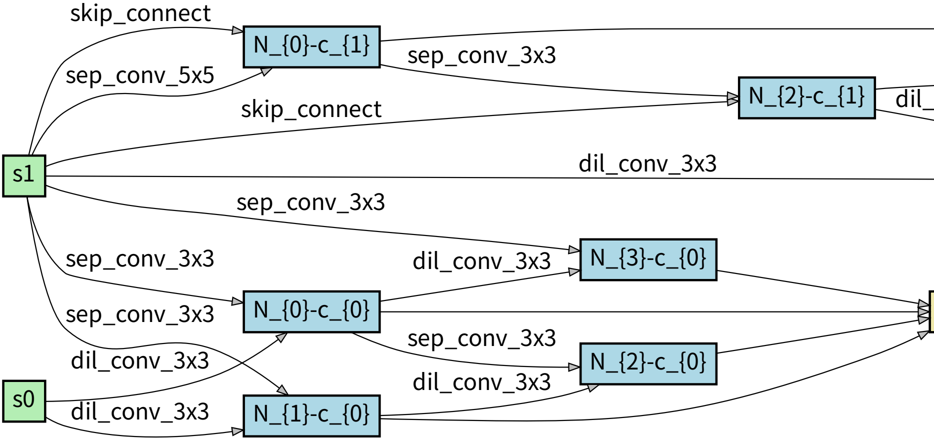
skip_connect
N_{0}-c_{1}
sep_conv_5x5
sep_conv_3x3
N_{2}-c_{1}
dil_
skip_connect
s1
dil_conv_3x3
sep_conv_3x3
N_{3}-c_{0}
sep_conv_3x3
dil_conv_3x3
N_{0}-c_{0}
sep_conv_3x3
dil_conv_3x3
sep_conv_3x3
N_{2}-c_{0}
s0
dil_conv_3x3
dil_conv_3x3
N_{1}-c_{0}

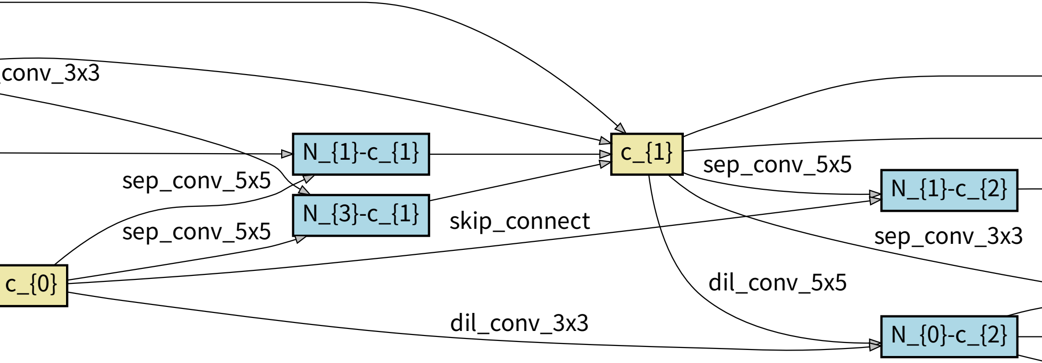
conv_3x3
N_{1}-c_{1}
c_{1}
sep_conv_5x5
sep_conv_5x5
N_{1}-c_{2}
sep_conv_5x5
N_{3}-c_{1}
skip_connect
sep_conv_3x3
c_{0}
dil_conv_5x5
dil_conv_3x3
N_{0}-c_{2}

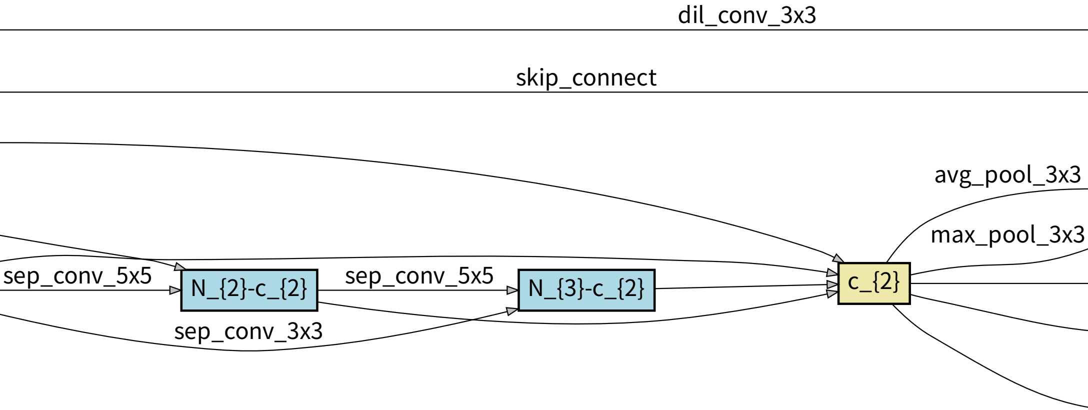
dil_conv_3x3
skip_connect
avg_pool_3x3
max_pool_3x3
sep_conv_5x5
N_{2}-c_{2}
sep_conv_5x5
N_{3}-c_{2}
c_{2}
sep_conv_3x3

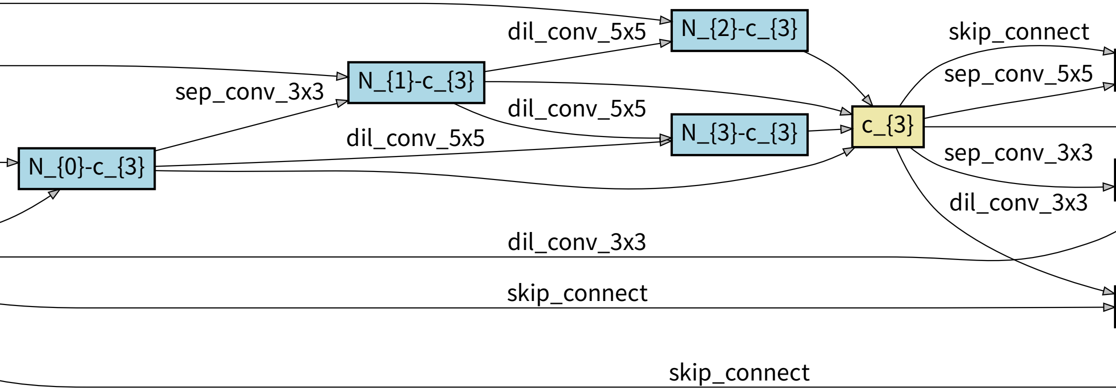
N_{2}-c_{3}
dil_conv_5x5
skip_connect
N_{1}-c_{3}
sep_conv_5x5
sep_conv_3x3
dil_conv_5x5
N_{3}-c_{3}
c_{3}
dil_conv_5x5
sep_conv_3x3
N_{0}-c_{3}
dil_conv_3x3
dil_conv_3x3
skip_connect
skip_connect

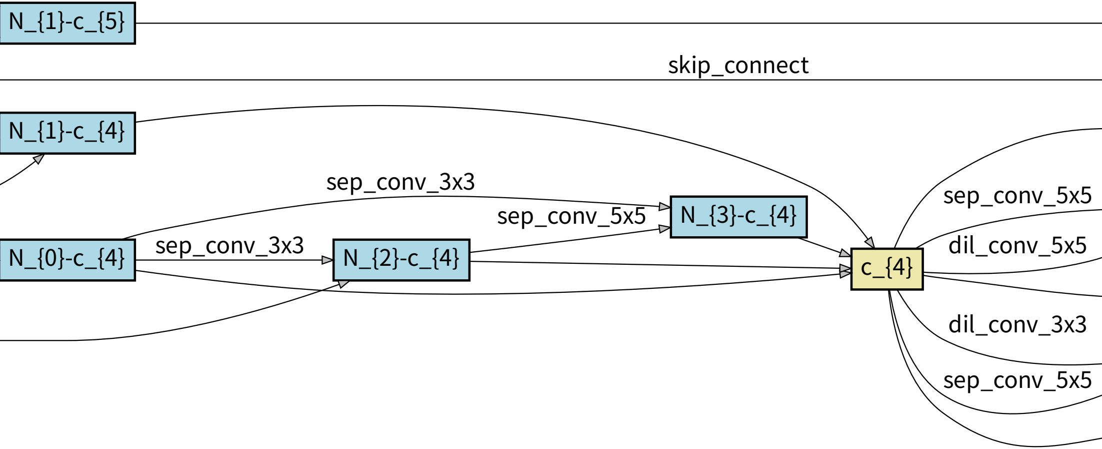
N_{1}-c_{5}
skip_connect
N_{1}-c_{4}
sep_conv_3x3
N_{3}-c_{4}
sep_conv_5x5
N_{0}-c_{4}
sep_conv_3x3
N_{2}-c_{4}
c_{4}
sep_conv_5x5
dil_conv_5x5
dil_conv_3x3
sep_conv_5x5

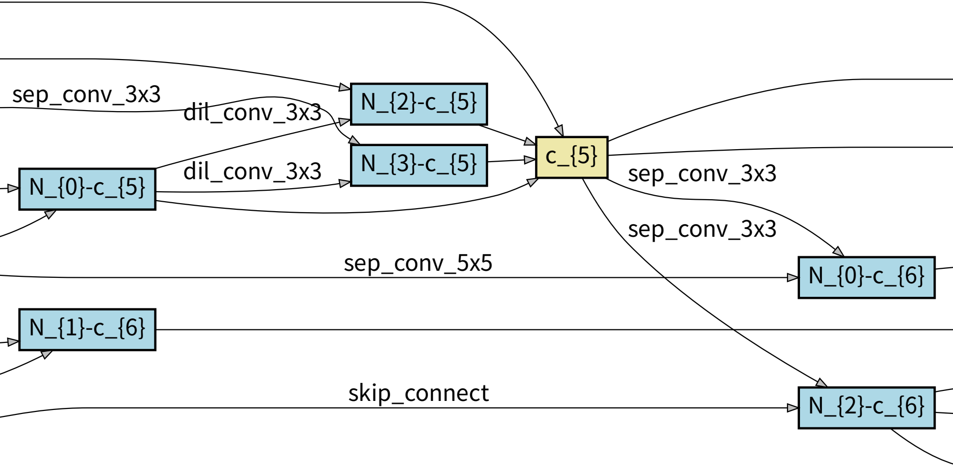
sep_conv_3x3
dil_conv_3x3
N_{2}-c_{5}
N_{3}-c_{5}
dil_conv_3x3
N_{0}-c_{5}
c_{5}
sep_conv_3x3
sep_conv_3x3
sep_conv_5x5
N_{0}-c_{6}
N_{1}-c_{6}
skip_connect
N_{2}-c_{6}

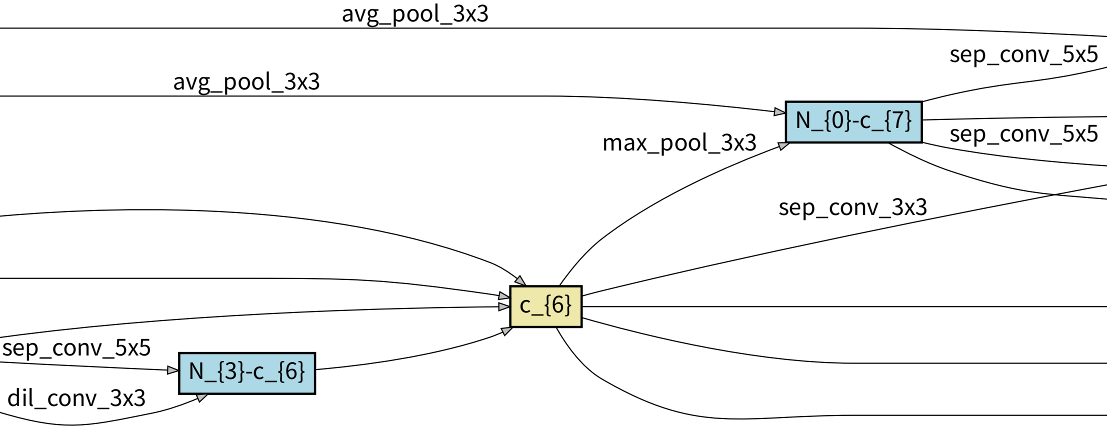
avg_pool_3x3
sep_conv_5x5
avg_pool_3x3
N_{0}-c_{7}
max_pool_3x3
sep_conv_5x5
sep_conv_3x3
c_{6}
sep_conv_5x5
N_{3}-c_{6}
dil_conv_3x3

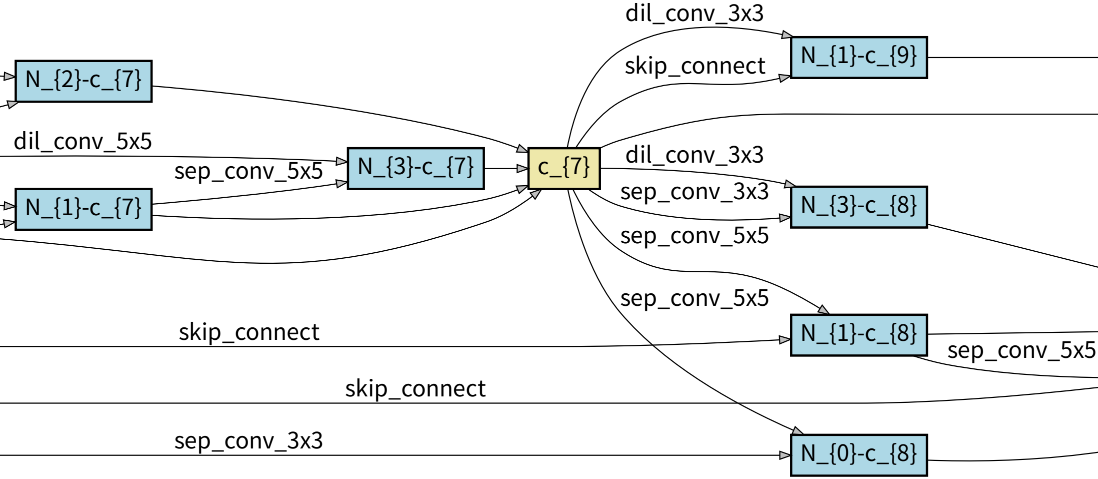
dil_conv_3x3
N_{1}-c_{9}
skip_connect
N_{2}-c_{7}
dil_conv_5x5
N_{3}-c_{7}
c_{7}
dil_conv_3x3
sep_conv_5x5
sep_conv_3x3
N_{3}-c_{8}
N_{1}-c_{7}
sep_conv_5x5
sep_conv_5x5
skip_connect
N_{1}-c_{8}
sep_conv_5x5
skip_connect
sep_conv_3x3
N_{0}-c_{8}

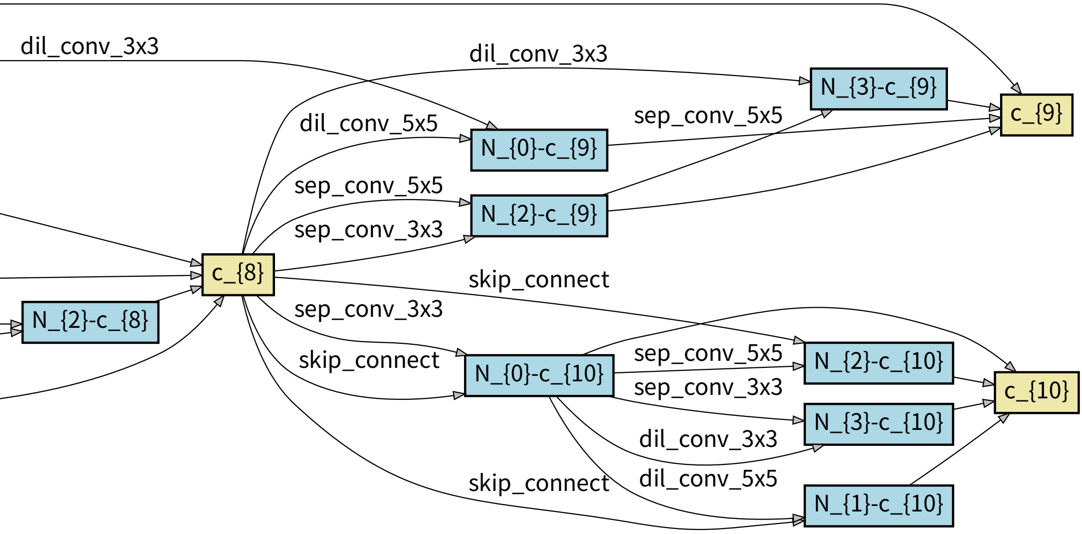
dil_conv_3x3
dil_conv_3x3
N_{3}-c_{9}
c_{9}
dil_conv_5x5
sep_conv_5x5
N_{0}-c_{9}
sep_conv_5x5
N_{2}-c_{9}
sep_conv_3x3
c_{8}
skip_connect
N_{2}-c_{8}
sep_conv_3x3
skip_connect
N_{0}-c_{10}
sep_conv_5x5
N_{2}-c_{10}
sep_conv_3x3
c_{10}
N_{3}-c_{10}
dil_conv_3x3
dil_conv_5x5
skip_connect
N_{1}-c_{10}