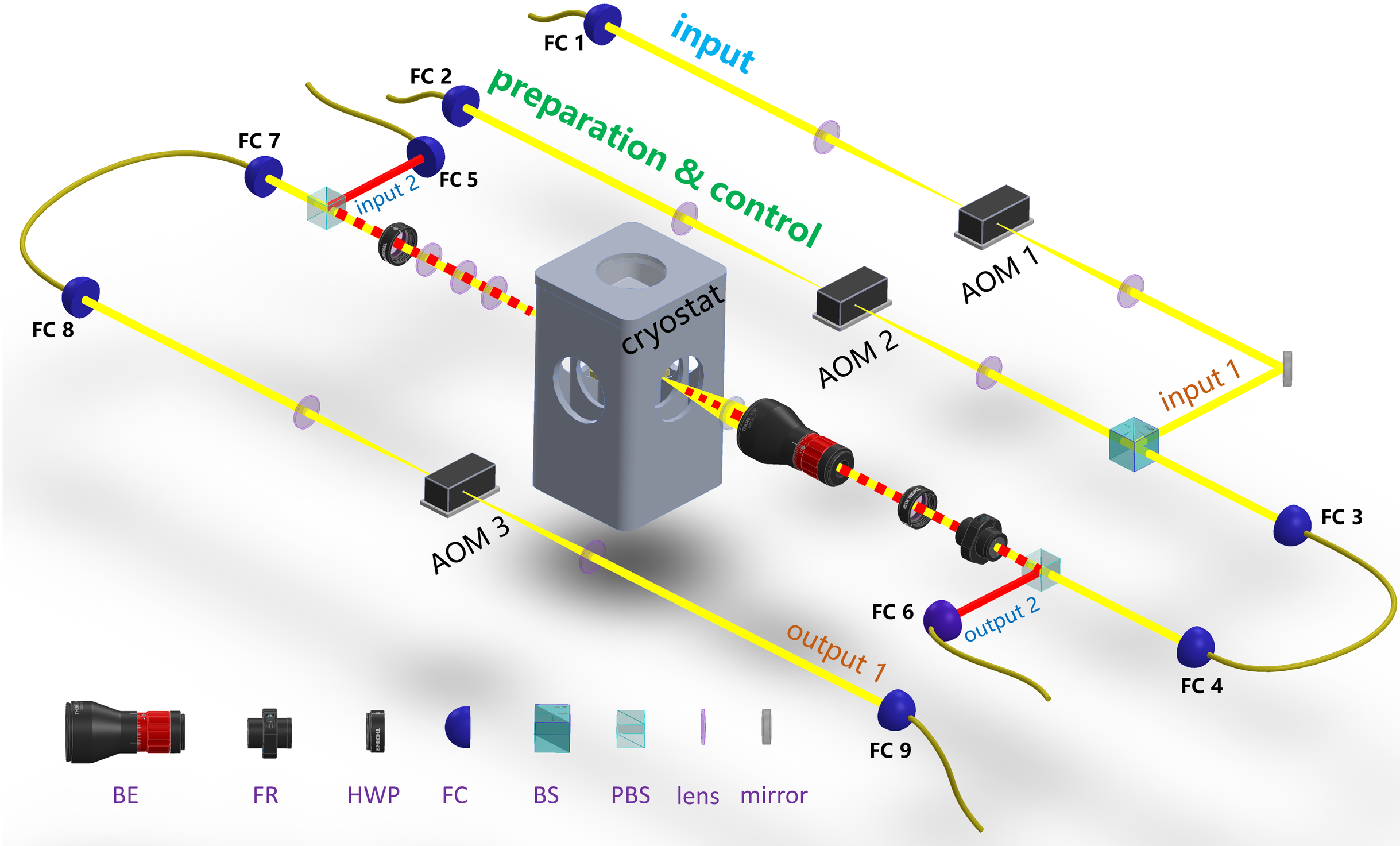
FC 1
input
FC 2
preparation & control
FC 7
FC 5
input 2
FC 8
cryostat
AOM 1
AOM 2
input 1
AOM 3
FC 3
FC 6
output 2
output 1
FC 4
FC 9
BE
FR
HWP
FC
BS
PBS
lens
mirror