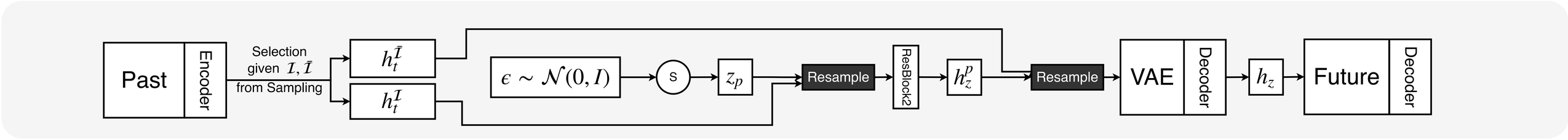
Past
Encoder
Selection
given $\mathcal{I}, \bar{\mathcal{I}}$
from Sampling
$h_t^{\bar{\mathcal{I}}}$
$h_t^{\mathcal{I}}$
$\epsilon \sim \mathcal{N}(0, I)$
s
z_p
Resample
ResBlock2
h_z^p
Resample
VAE
Decoder
h_z
Future
Decoder

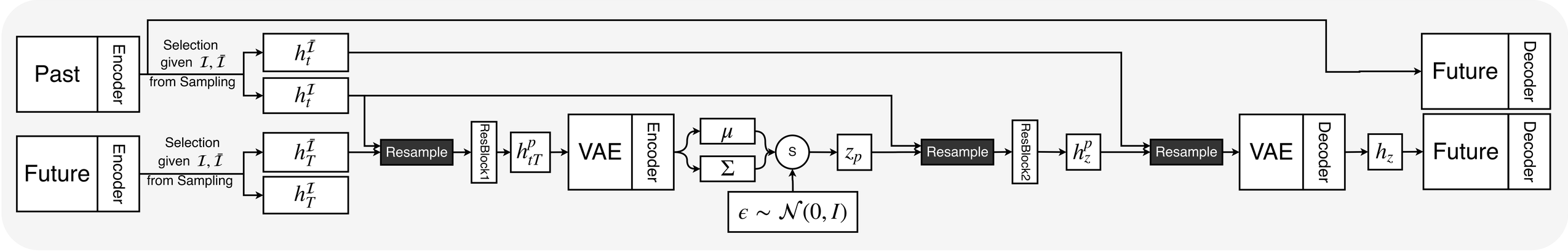
Past
Encoder
Selection
given $\mathcal{I}, \bar{\mathcal{I}}$
from Sampling
$h_t^{\bar{\mathcal{I}}}$
$h_t^{\mathcal{I}}$
Future
Encoder
Selection
given $\mathcal{I}, \bar{\mathcal{I}}$
from Sampling
$h_T^{\bar{\mathcal{I}}}$
$h_T^{\mathcal{I}}$
Resample
ResBlock1
h_{tT}^p
VAE
Encoder
μ
Σ
s
$\epsilon \sim \mathcal{N}(0, I)$
z_p
Resample
ResBlock2
h_z^p
Resample
VAE
Decoder
h_z
Future
Decoder
Future
Decoder