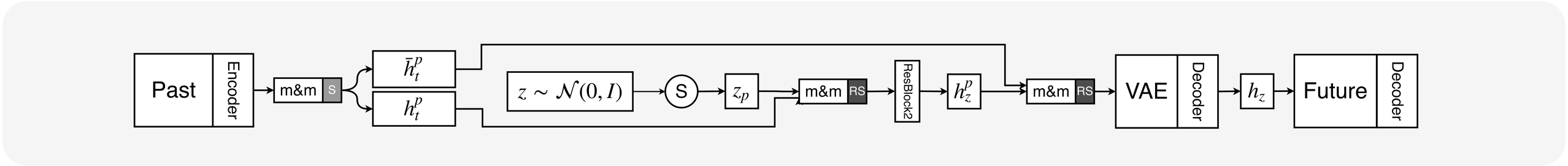
Past
Encoder
m&m
S
$\bar{h}_t^p$
h_t^p
$z \sim \mathcal{N}(0, I)$
S
z_p
m&m
RS
ResBlock2
h_z^p
m&m
RS
VAE
Decoder
h_z
Future
Decoder

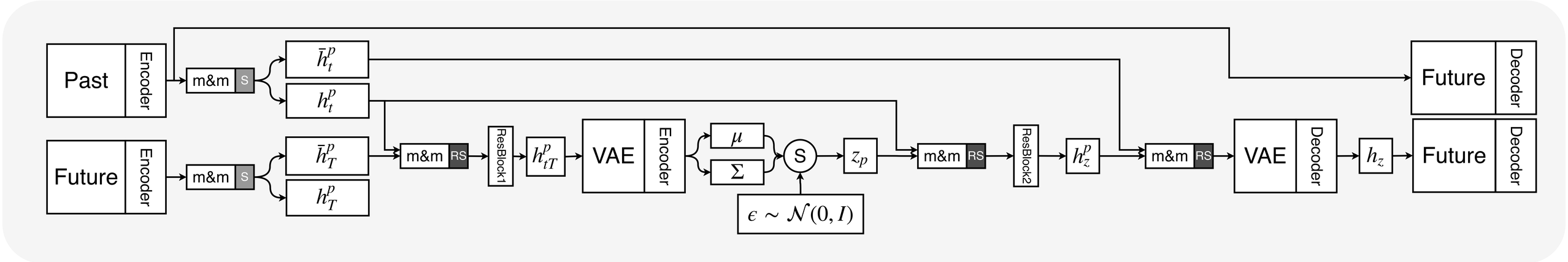
Past
Encoder
m&m
S
$\bar{h}_t^p$
h_t^p
Future
Encoder
m&m
S
$\bar{h}_T^p$
h_T^p
m&m
RS
ResBlock1
h_{tT}^p
VAE
Encoder
μ
Σ
S
$\epsilon \sim \mathcal{N}(0, I)$
z_p
m&m
RS
ResBlock2
h_z^p
m&m
RS
VAE
Decoder
h_z
Future
Decoder
Future
Decoder