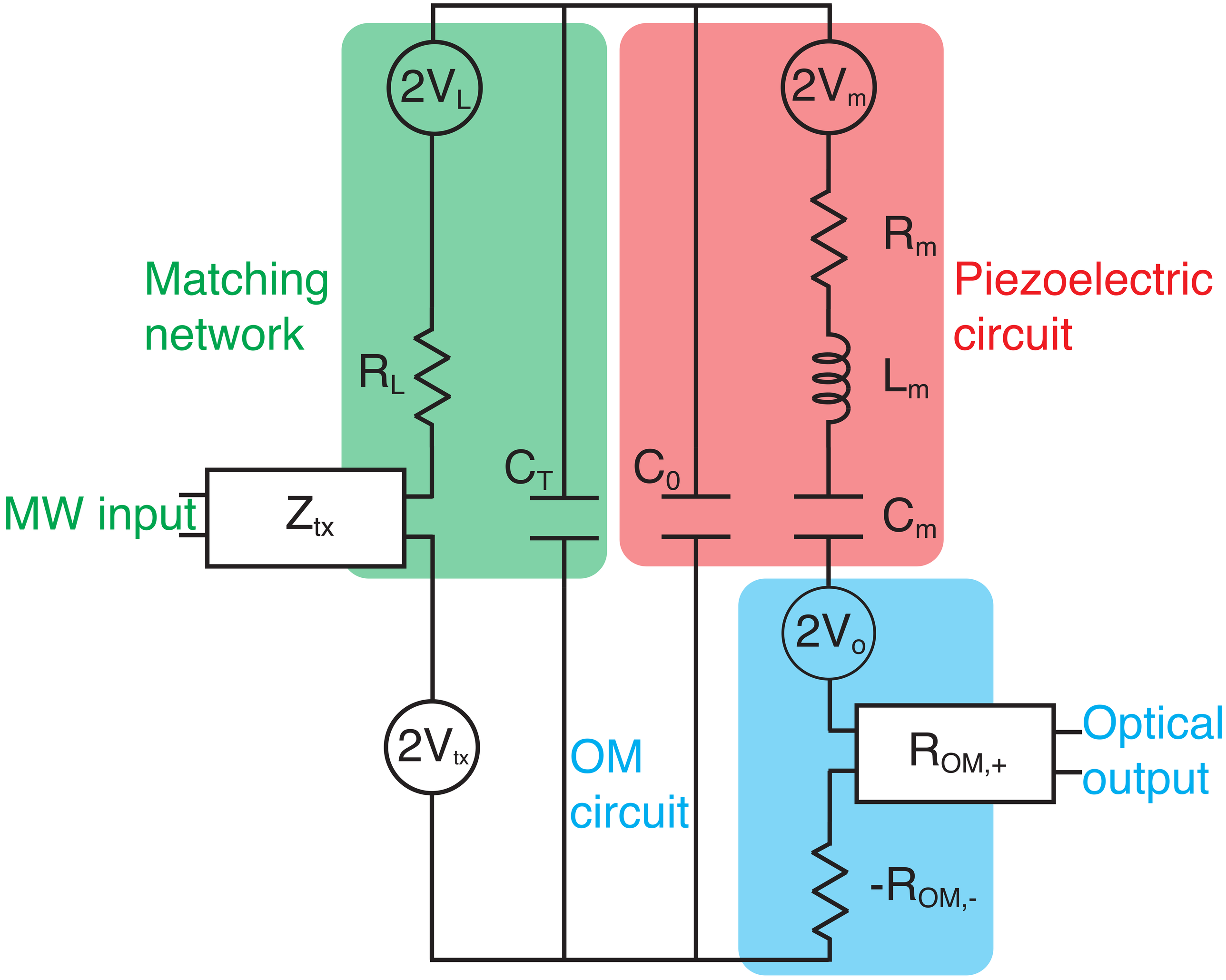
Matching network
Piezoelectric circuit
OM circuit
MW input
Optical output
2V_L
2V_m
R_m
R_L
L_m
C_T
C_0
C_m
Z_tx
2V_o
2V_tx
R_OM,+
-R_OM,-